MESSENGER

MDIS CDR/RDR SOFTWARE INTERFACE SPECIFICATION

Version 1.1

Prepared by:

Alan Mick, Scott Murchie, Louise Prockter, and Andrew Rivkin
JHU/APL

Edward Guinness and Jennifer Ward
PDS Geosciences Node
Washington University

Approved by:

Alan Mick PDS Lead, MESSENGER	Ralph McNutt Project Scientist, MESSENGER
Scott Murchie Cognizant Co-Investigator, MDIS	Susan Schneider SOC Lead, MESSENGER
Lisa Gaddis Manager, PDS Imaging Node	Ed Grayzeck Program Manager, PDS

April 29, 2008

DOCUMENT CHANGE LOG

Date	Description	Sections affected
UNK	Initial Draft	All
2/11/08	Reformatted and updated, JW & SM	All
4/29/08	Updated description of data quality index Updated description of pivot-related keywords Updated description of shifting of image due to pixel binning	All

TBD ITEMS

Section	Description
3.3.12	Extras directory contents to be added.

CONTENTS

1. INTRODUCTION 9
1.1 Purpose and Scope 9
1.2 Contents 10
1.3 Applicable Documents and Constraints 10
1.4 Relationships with Other Interfaces 11
2. DATA PRODUCT CHARACTERISTICS AND ENVIRONMENT 11
2.1 Instrument Overview 11
2.1.1 Hardware Overview 11
2.1.2 Pivot Mechanism 12
2.1.3 MDIS Data Compression 14
2.1.4 Exposure Control 17
2.1.5 Optical Design 18
2.1.6 Filters 20
2.1.7 Flatfield Non-uniformity 21
2.1.8 Dark Columns 22
2.1.9 Pixel Shift Due to Pixel Binning 23
2.2 Flyby Imaging Overview 23
2.3 Orbital Imaging Overview 24
2.3.1 Global Monochrome Basemap 24
2.3.2 Stereo Mapping 24
2.3.3 Gap-filling the Flyby Color Map 24
2.3.4 Polar Mapping 25
2.3.5 High-resolution Imaging 25
2.3.6 Targeted Color 25
2.3.7 Color Photometry 26
2.3.8 On-orbit Calibrations 26
2.4 Data Product Overview 26
2.4.1 CDRs 26
2.4.2 DDRs 26
2.4.3 BDRs 27
2.4.4 MDRs 27
2.5 Data Processing 27
2.5.1 Data Processing Level 27
2.5.2 Data Product Generation 28
2.5.3 Data Flow and Transmittal to PDS 31
2.5.4 Transmittal Time Line 32
2.6 Standards Used in Generating Data Products 33
2.6.1 PDS Standards 33
2.6.2 Time Standards 33
2.6.3 Coordinate Systems 34
2.6.4 Data Storage Conventions 34

2.7 Data Validation **34**
3. DETAILED DATA PRODUCT SPECIFICATIONS **35**
3.1 Data Product Structure and Organization **35**
3.2 Geometric Elements **35**
3.3 Archive Volume Structure and Contents **35**
3.3.1 Root Directory 36
3.3.2 Index Directory 36
3.3.3 Catalog Directory 39
3.3.4 Document Directory 40
3.3.5 CDR Directory (CDR Volumes Only) 41
3.3.6 DDR Directory (DDR Volumes Only) 44
3.3.7 BDR Directory (BDR Volumes Only) 47
3.3.8 MDR Directory (MDR Volumes Only) 51
3.3.9 Calib Directory 56
3.3.10 Label Directory 58
3.3.11 Browse Directory 58
3.3.12 Extras Directory 58
4. APPLICABLE SOFTWARE **59**
4.1 Utility Programs **59**
4.2 Applicable PDS Software Tools **59**
INDEX **60**
APPENDIX A. DATA ARCHIVE TERMS **61**
APPENDIX B. LABEL AND HEADER DESCRIPTIONS **62**
APPENDIX C. CDR LABEL **87**
APPENDIX D. DDR LABEL **91**
APPENDIX E1. BDR LABEL (I/F IMAGE) **96**
APPENDIX E2. BDR LABEL (DERIVED DATA IMAGE) **98**
APPENDIX F1. MDR LABEL (I/F IMAGE) **100**
APPENDIX F2. MDR LABEL (DERIVED DATA IMAGE) **103**
APPENDIX G. CDR BROWSE PRODUCT LABEL **106**
APPENDIX H. BDR BROWSE PRODUCT LABEL **110**
APPENDIX I. MDR BROWSE PRODUCT LABEL **112**
APPENDIX J. ATMEL TH7888A DATA SHEET **114**
APPENDIX K. MISSION PHASE DEFINITIONS MEMORANDUM **135**

FIGURES AND TABLES

Figure 1-1: MDIS Instrument.....9
Table 2-1: MDIS Camera Details. 11
Figure 2-2: MESSENGER Spacecraft Instrument Deck.....12
Figure 2-3: MDIS Design. 13
Figure 2-4: Range of motion of the MDIS pivot platform. Operational range is -40° Sunward to +50° antisunward (planetward). When stowed, the sensitive first optic of each telescope is protected. 14
Figure 2-5a: MDIS/DPU Real-time Compression flowchart. 16
Figure 2-5b: MESSENGER Main Processor (MP) image post-processing compression flowchart. 16
Figure 2-6: Mapping of 12 bits to 8 bits will be accomplished using onboard look-up tables. The tables are designed to preferentially preserve information at different DN ranges, and they can accommodate a nominal detector dark level as well as one that has changed with time. “Noise” refers to the read noise, which is “low” (1 12-bit DN) for the WAC CCD and “high” (2 12-bit DNs) for the NAC CCD. (1) Low noise, high bias SNR proportional. Usage: Typical imaging with varied brightness. Nominal for WAC monochrome imaging. (2) Low noise, high bias DN-weighted SNR proportional. Usage: Faint object imaging. (3) High noise, high bias DN-weighted SNR proportional. Usage: B/W, low brightnesses. Nominal for NAC imaging. (4) Low noise, medium bias SNR proportional. (5) Low noise, medium bias DN-weighted SNR proportional. Usage: Faint objects. (6) High noise, medium bias DN-weighted SNR proportional. Usage: B/W mostly low brightness. (7) Zero-bias SNR proportional. Usage: Typical imaging, varied brightness. (8) Linear. Usage: High brightness mapping, preserves high DN information.....17
Figure 2-7: Autoexposure algorithm decision tree. A 64-bin histogram is computed in hardware for each image. If an image is determined to be underexposed, the actual exposure is computed as Actual = minimum brightness such that the sum of the pixels above this brightness < saturation threshold. 18
Figure 2-8: WAC optical layout. 19
Table 2-9: MDIS specifications. 19
Figure 2-10: NAC optical layout. 20
Table 2-11: WAC Filters Specifications – Wavelength and FWHM Measured at -26° C. 21
Figure 2-12: Non-uniformity due to dust particles is visible in integrating sphere images acquired through the quartz window in the OCF chamber door of the calibration facility.....22
Figure 2-13: Pixels intended for dark columns, and actual pixels used in binned images for WAC and NAC.....23
Table 2-14: Definitions of MDIS data products. EDRs are not described in this document. 27
Table 2-15: Processing Levels for Science Data Sets. 28
Table 2-16: Solar irradiance used to convert radiance to units of I/F. 30
Figure 2-17: Sequential processing of EDRs to yield RDRs, showing roles of CDRs and

DDRs. 31
Table 2-18: Schedule of MDIS Data Releases by Mission Phase. Adapted from DMSAP (Applicable Document 4). 33
Table 3-1: Root Directory Contents. 36
Table 3-2: Index Directory Contents. 37
Table 3-3: CDR/DDR Index Table Contents. 38
Table 3-4: BDR/MDR Index Table Contents. 39
Table 3-5: Catalog Directory Contents. 40
Table 3-6: Document Directory Contents. 41
Table 3-7: Filter numbers and their bandpasses. 41
Table 3-8. MDIS-specific values for CDR label keywords. 44
Table 3-9. MDIS-specific values for DDR label keywords. 47
Table 3-10. Latitude and longitude limits of Mercury Charts. 48
Table 3-11. MDIS-specific values for BDR label keywords. 51
Table 3-12. MDIS-specific values for MDR label keywords. 55
Table 3-13: Calib Directory Contents. 57
Table 3-14: Label Directory Contents. 58

ACRONYMS

ACT	Applied Coherent Technology Corporation
APL	The Johns Hopkins University Applied Physics Laboratory
ASCII	American Standard Code for Information Interchange
BDR	Map Projected Basemap Reduced Data Record
BP	Bandpass
BW	Bandwidth
CCD	Charge-Coupled Device
CDR	Calibrated Data Record
CODMAC	Committee on Data Management and Computation
DDR	Derived Data Record
DN	Data Number
DPU	Data Processing Unit
DVD	Digital Video Disc
EDR	Experiment Data Record
FOV	Field-of-view
FPGA	Field-programmable Gate Arrays
FTP	File Transfer Protocol
GRS	MESSENGER Gamma-Ray Spectrometer
IAU	International Astronomical Union
I/F	Intensity divided by flux, or the ratio of radiance to incident solar irradiance
IFOV	Instantaneous field-of-view
ISO	International Standards Organization
JHU/APL	The Johns Hopkins University Applied Physics Laboratory
JPL	Jet Propulsion Laboratory
MASCS	MESSENGER Mercury Atmospheric and Surface Composition Spectrometer
MESSENGER	MErcury, Surface, Space ENvironment, GEochemistry, and Ranging
MDIS	MESSENGER Mercury Dual Imaging System
MDR	Map Projected Multispectral Reduced Data Record
MET	Mission Elapsed Time
MLA	MESSENGER Mercury Laser Altimeter
MOC	Mars Orbiter Camera
MP	Main Processor
NAC	Narrow Angle Camera
NAIF	Navigation and Ancillary Information Facility
NASA	National Aeronautics and Space Administration
NEAR	Near Earth Asteroid Rendezvous (mission)
OCF	Optical Calibration Facility
PCK	Planetary Constant Kernel (SPICE)
PDS	Planetary Data System
PNG	Portable Network Graphics (file format)
RDR	Reduced Data Record
SIS	Software Interface Specification
SOC	Science Operations Center
SNR	Signal-to-noise Ratio

SQL	Structured Query Language
SPICE	Spacecraft Planet Instrument C-matrix Events; a set of data formats for spacecraft ephemeris, attitude, and instrument pointing
SSR	Solid State Recorder
TBD	To Be Determined
UTC	Coordinated Universal Time
WAC	Wide Angle Camera
XRS	MESSENGER X-ray Spectrometer

1. INTRODUCTION

1.1 Purpose and Scope

This Software Interface Specification (SIS) describes the organization and contents of the MESSENGER Mercury Dual Imaging System (MDIS) Calibrated Data Record (CDR) and Reduced Data Record (RDR) archive. This archive includes data from the two cameras onboard the MESSENGER spacecraft: the Wide Angle Camera (WAC) and the Narrow Angle Camera (NAC) (see Figure 1-1 below). The MDIS CDR/RDR data products are deliverable to the Planetary Data System (PDS) and the scientific community that it supports. All data formats are based on the PDS standard.

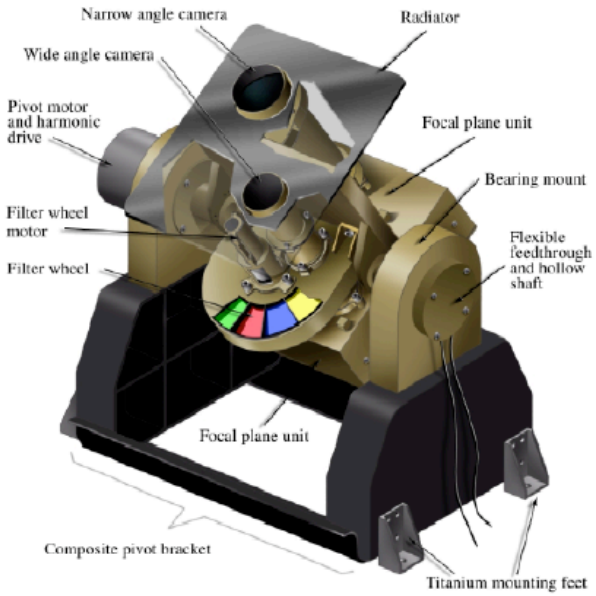

Figure 1-1: MDIS Instrument.

There are four MDIS data sets defined in this SIS document. These include:

1) Calibrated Data Records (CDRs)
2) Derived Data Records (DDRs)
3) Map Projected Basemap Reduced Data Records (BDRs)
4) Map Projected Multispectral Reduced Data Records (MDRs)

These data sets are defined in section 2.3 and described in more detail in section 3.5 of this document.

This SIS is useful to those who wish to understand the format and content of the MDIS data products and ancillary support data. The SIS applies to the MDIS CDR/RDR data products produced during the course of MESSENGER preflight calibration and mission operations. The users for whom this SIS is intended are the scientists who will analyze the data, including those associated with the MESSENGER Project and those in the general planetary science community.

1.2 Contents

This Data Product SIS describes how data products generated by the MESSENGER team are processed, formatted, labeled, and uniquely identified. The document details standards used in generating the products and software that may be used to access the products. Data product structure and organization is described in sufficient detail to enable a user to read the product. Finally, an example of each product label is provided.

1.3 Applicable Documents and Constraints

This MDIS CDR/RDR SIS is responsive to the following documents:

1. MESSENGER Mercury: Surface, Space Environment, Geochemistry, Ranging: A mission to Orbit and Explore the Planet Mercury, Concept Study, March 1999.
2. Planetary Data System Archive Preparation Guide (APG), August 29, 2006, Version 1.1, JPL D-31224.
3. Planetary Data System Standards Reference, March 20, 2006, Version 3.7, JPL D-7669, Part-2.
4. MESSENGER Data Management and Science Analysis Plan, The Johns Hopkins University APL, 7384-9019, Revision A, Sept. 25, 2006.
5. [PLR] Appendix 7 to the discovery program Plan: Program Level Requirement for the MESSENGER Discovery project, June 20, 2001.
6. MESSENGER Instrument DPU/MDIS Flight Software Specification, John Hayes, 7390-9041, Revision a, Feb. 26, 2004. Describes the instrument flight software.
7. MDIS Compression Description, Pat Murphy, SRM-03-056, Aug. 25, 2003. Describes the MESSENGER Main Processor wavelet compression, sub-framing and binning flight software.
8. Hawkins, S. E., III, et al., Multi-Spectral Imager on the Near Earth Asteroid Rendezvous mission, Space Sci. Rev., 82, 31-100, 1997.
9. Hawkins, S.E., III, et al., The Mercury Dual Imaging System on the MESSENGER Spacecraft, Space Sci Rev 131: 247–338, DOI 10.1007/s11214-007-9266-3, 2007.
10. Hansen, O. L., Surface temperature and emissivity of Mercury, Astrophys. J., 190, 715-717, 1974.
11. MESSENGER Mercury Dual Imaging System (MDIS) Experimental Data Record (EDR) Software Interface Specification (SIS) document, The Johns Hopkins University, APL, V2G, Nov. 9, 2007.
12. Davies, M.E. and F.Y. Katayama, The Control Network of Mercury, Rand Corporation Report R2089, 1976.

1.4 Relationships with Other Interfaces

Data products described in this SIS are produced by the MESSENGER Science Operations Center (SOC). Changes to the SOC processing algorithms may cause changes to the data products and, thus, this SIS. The MDIS CDR/RDR products are derived from MDIS Experimental Data Record (EDR) products. As such, changes to the EDR product may affect the CDR/RDR products. Changes in MDIS data products or this SIS may affect the design of the MDIS archive volumes.

2. DATA PRODUCT CHARACTERISTICS AND ENVIRONMENT

2.1 Instrument Overview

The Wide Angle Camera (WAC) supports 12 band pass filters, while the Narrow Angle Camera (NAC) is monochromatic. Table 2-1 summarizes relevant parameters for both the WA and NA cameras. The RDR format for each camera is identical.

	Narrow Angle Camera (NAC)	**Wide Angle Camera (NAC)**
Field of View	1.5 degree	10.5 degree
Scan Range	-40º to +50º from spacecraft +z	-40º to +50º from spacecraft +z
Exposure Time	1 to 9989 ms	1 to 9989 ms
Frame Transfer Time	3 ms	3 ms
Image Readout Time	1 s	1 s
Spectral Filters	1	12 positions
Focal Length	550 mm	78 mm
Collecting Area	462 mm^2	48 mm^2
Detector- TH7888A	CCD 1024 x 1024, 14µm pixels	CCD 1024 x 1024, 14 µm pixels
Pixel FOV	5.1 m at 200 km altitude	35.8 m at 200 km altitude

Table 2-1: MDIS Camera Details.

2.1.1 Hardware Overview

Most of the MESSENGER instruments are fixed-mounted (Figure 2-2), so that coverage of Mercury is obtained by spacecraft motion over the planet. The imaging system uses a pivot platform to accommodate flyby imaging and optical navigation, as well as imaging during the orbital phase.

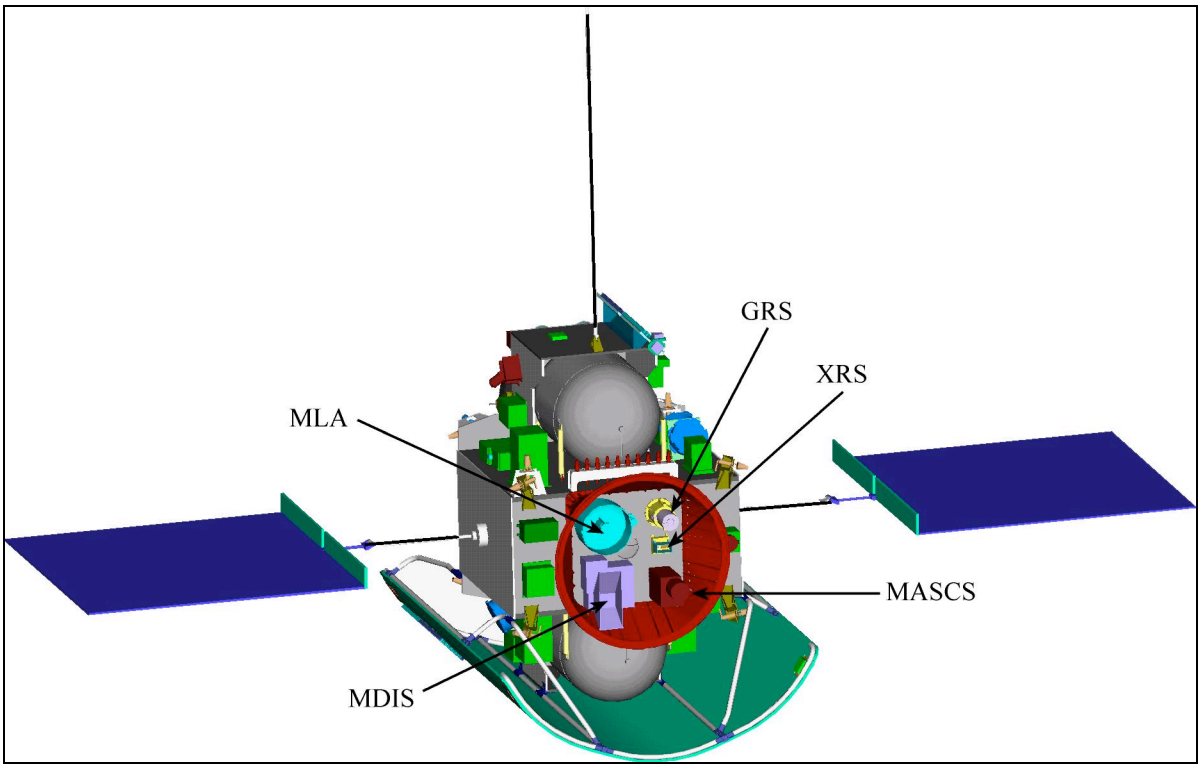

Figure 2-2: MESSENGER Spacecraft Instrument Deck.

The full MDIS instrument includes the pivoting dual camera system as well as the two redundant external DPUs. The dual camera assembly without the DPUs is usually simply referred to as "MDIS." The overall design and look of the MDIS, shown in Figure 2-3, was driven by mass limitations, the severe thermal environment at Mercury, and the requirement for a large field-of-regard for optical navigation and off-nadir pointing. The total mass of MDIS is 8.32 kg, including flight blankets, harness to DPU, and thermal gasket.

The pivot platform houses the multispectral WAC and the monochrome NAC. The thermal design maintains the CCD detectors in the WAC and NAC within their operating temperature range of -45°C to -10°C. Only one DPU may be active at a time, and due to thermal constraints only one camera will operate at a time; however, observations with the two cameras can be interleaved at 5-s intervals. A separate electronics assembly accommodates switching between the various modes of operating with the redundant DPUs. The pivot platform has a large range of motion (~240°) to allow the cameras to be "tucked away" to protect the optics from contamination.

2.1.2 Pivot Mechanism

The MDIS pivot platform is controlled by a stepping motor (Fig. 2-3). The motor phases are controlled directly by the DPU software to move the platform. The phase pattern can be adjusted by software to move the platform forwards or backwards. The pivot platform's range of motion is mechanically constrained by "hard" stops. The range of motion is further constrained by "soft" stops applied by the software. The nominal allowed range is shown in Fig. 2-4. The total range of motion of MDIS is about 240°, limited by hard mechanical stops in the pivot motor.

The hard stops are fixed at -185º and 55º. The pivot motor drive-train provides precision rotation over the 90° operational range of motion (Figure 2-4) about the spacecraft +Z axis.

The MDIS pivot actuator is capable of accurately stepping in intervals of 0.01° (~150 µrad) per step. Pointing knowledge is determined by first "homing" the instrument, which is accomplished by driving the actuator into one of the mechanical hard stops for a period of time sufficient to ensure the orientation of the instrument if it had been previously stopped at the opposite extreme of travel. The rotational speed of the pivot platform is 1.1° /s. Once the location of the pivot actuator is known, the flight software retains this knowledge and subsequent pointing commands are achieved by counting pulses (steps) to the motor.

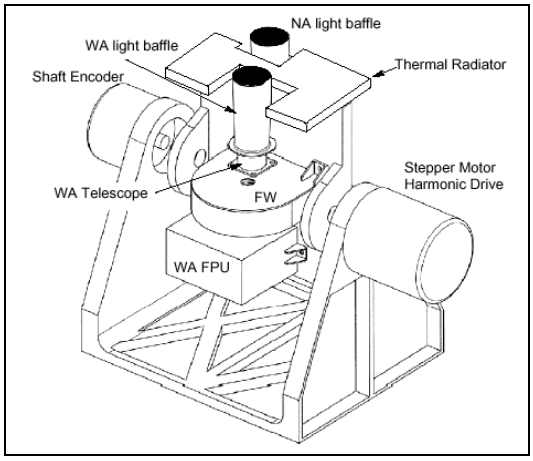

Figure 2-3: MDIS Design.

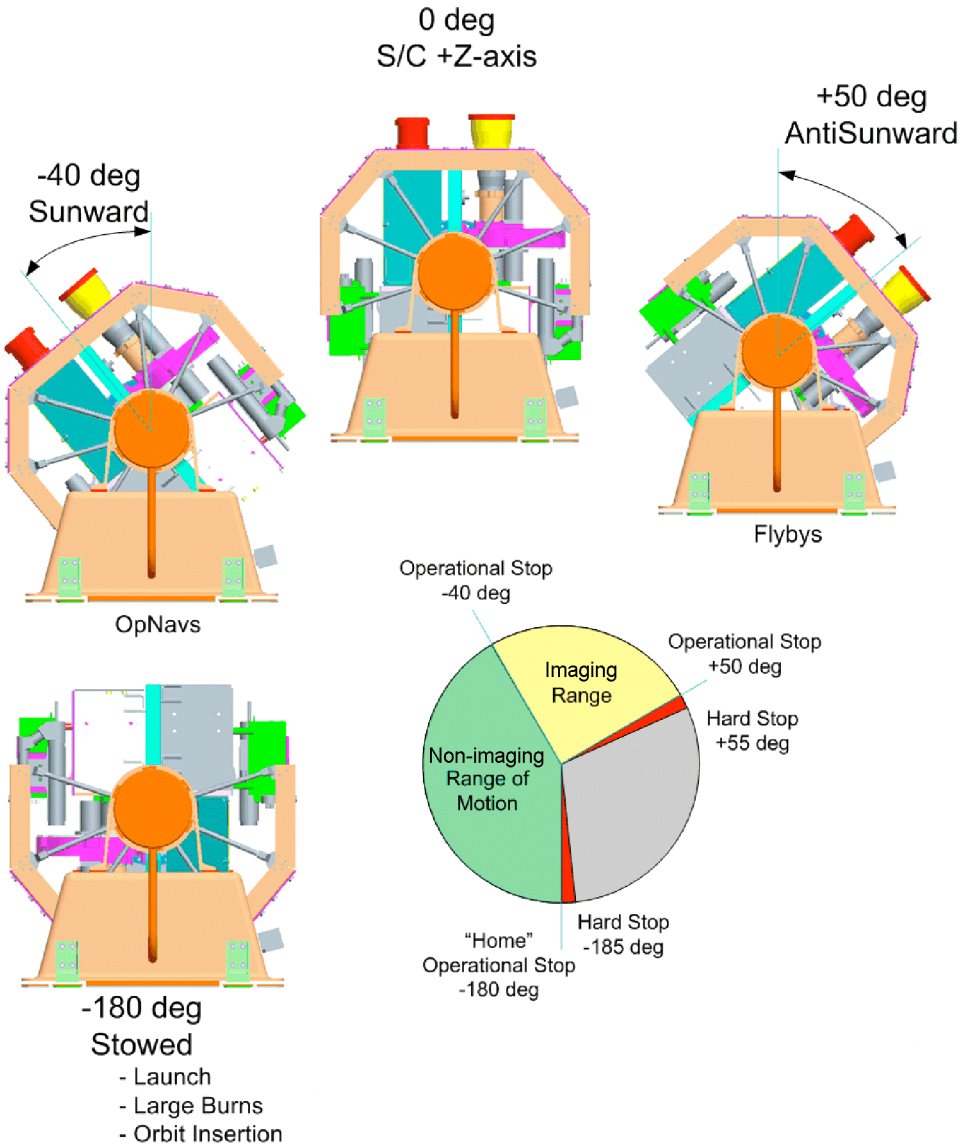

Figure 2-4: Range of motion of the MDIS pivot platform. Operational range is -40° Sunward to +50° antisunward (planetward). When stowed, the sensitive first optic of each telescope is protected.

2.1.3 MDIS Data Compression

The MESSENGER mission requires compression to meet its imaging objectives within the available downlink. Figure 2-5 summarizes the compression options available to MDIS at the instrument level using the DPU and the spacecraft main processor (MP). At the focal plane, 2×2 binning is available on-chip to reduce the 1024×1024 images to 512×512 format. In the DPU, 12-bit data number (DN) levels can be companded to 8 bits, and data can be compressed losslessly. The strategy for DPU image compression is to acquire all monochrome data in 8-bit mode, and color data in 12-bit mode, and to compress all data losslessly to conserve recorder

space. After data are written to the recorder, they can be uncompressed and recompressed by the MP more aggressively using any of several options: additional pixel-binning, subframing, and lossy compression using an integer wavelet transform. The nominal strategy for MP compression is that all data except flyby color imaging will be wavelet compressed, typically 8:1 for monochrome data and to a lower ratio (≤ 4:1) for orbital color data. Color imaging but not monochrome imaging may be further pixel-binned. For the special case of optical navigation images, there is a "jailbar" option that saves selected lines of an image at a fixed interval for optical navigation images of Mercury during flyby approaches.

Compression performance was extensively modeled prior to launch. The 12-to-8 bit look-up tables have been designed to preferentially retain information at low, medium, or high 12-bit DN values, for a nominal detector bias or for one that has decreased with time (Figure 2-6). Compression ratios to be used for flight have been based on a study of the magnitude and spatial coherence of compression artifacts using NEAR images. For expected loading of the main processor, simulations have shown that the MP can compress the equivalent of 82 full 1024×1024 images per day (or 330 512×512 images per day). The actual number of images has also been simulated, based on orbital trajectory simulations and the imaging plan described below. The MP image compression capabilities are consistent with the mission-average number of images per day. However, on days when lighting is favorable for global mapping, a peak of ~260 images per day may be expected, requiring on-chip binning of most of the data on peak days. The full implications for average imaging resolution are still being assessed.

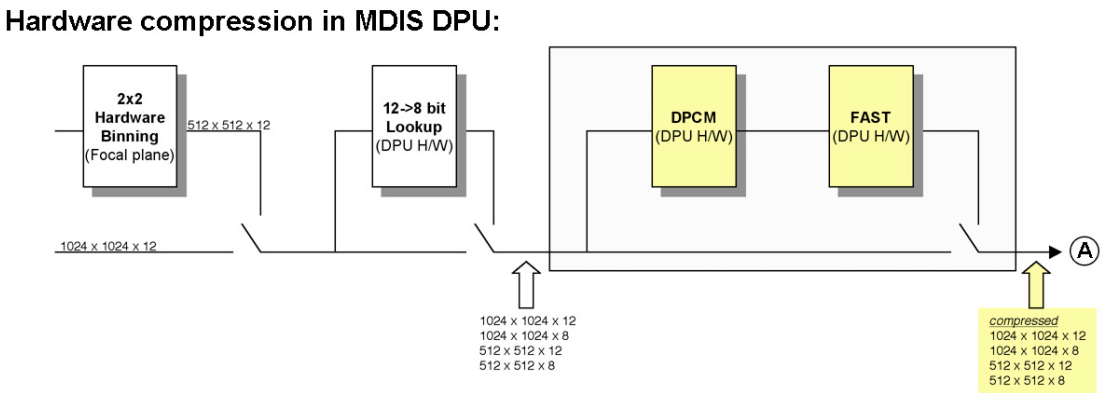

Figure 2-5a: MDIS/DPU Real-time Compression flowchart.

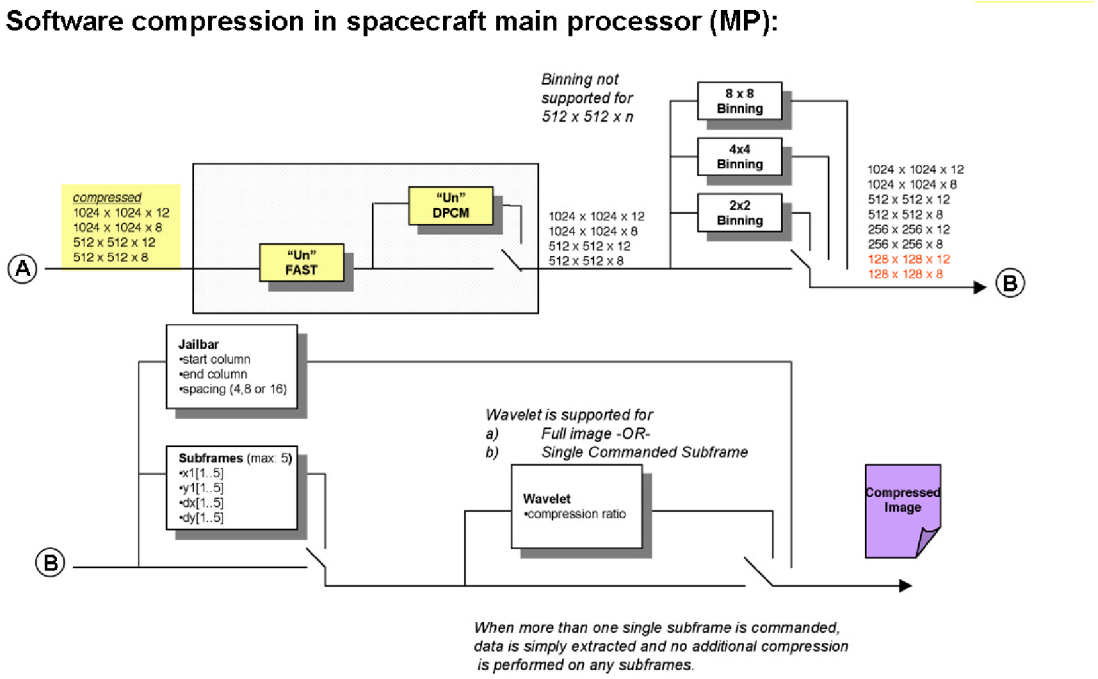

Figure 2-5b: MESSENGER Main Processor (MP) image post-processing compression flowchart.

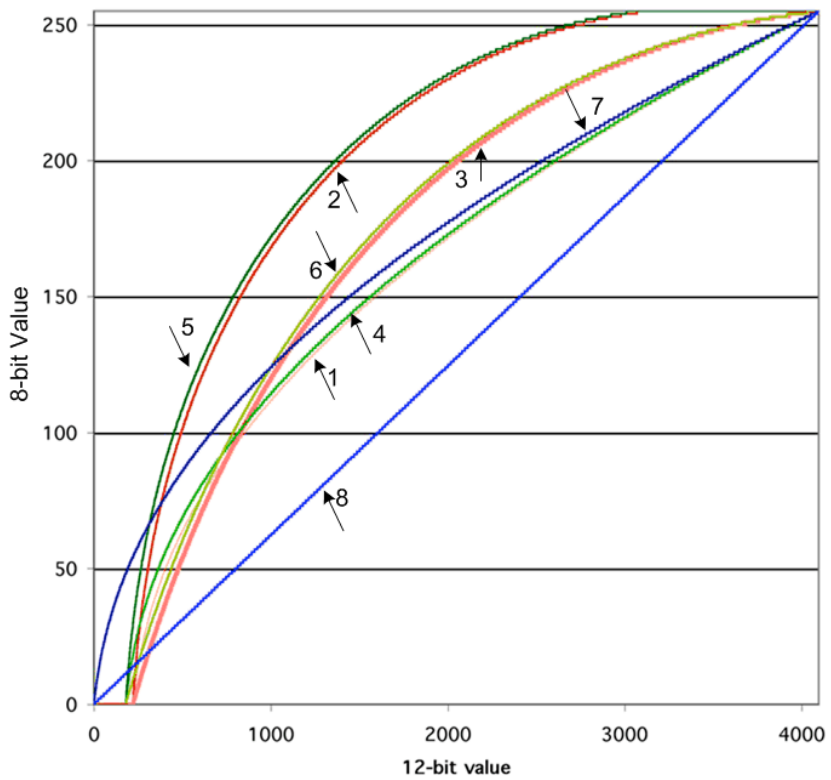

Figure 2-6: Mapping of 12 bits to 8 bits will be accomplished using onboard look-up tables. The tables are designed to preferentially preserve information at different DN ranges, and they can accommodate a nominal detector dark level as well as one that has changed with time. "Noise" refers to the read noise, which is "low" (1 12-bit DN) for the WAC CCD and "high" (2 12-bit DNs) for the NAC CCD. (1) Low noise, high bias SNR proportional. Usage: Typical imaging with varied brightness. Nominal for WAC monochrome imaging. (2) Low noise, high bias DN-weighted SNR proportional. Usage: Faint object imaging. (3) High noise, high bias DN-weighted SNR proportional. Usage: B/W, low brightnesses. Nominal for NAC imaging. (4) Low noise, medium bias SNR proportional. (5) Low noise, medium bias DN-weighted SNR proportional. Usage: Faint objects. (6) High noise, medium bias DN-weighted SNR proportional. Usage: B/W mostly low brightness. (7) Zero-bias SNR proportional. Usage: Typical imaging, varied brightness. (8) Linear. Usage: High brightness mapping, preserves high DN information.

2.1.4 Exposure Control

The exposure time of images can be set manually by command or automatically by the software. In manual mode, a full 9989 ms range of exposure times is available. In automatic mode, the exposure time of the next image is computed by the DPU software (Fig. 2-7). This computation has two distinct steps. The first step computes a new exposure time based on the brightness of a test image. The second step anticipates filter wheel motions and adjusts the computed exposure time accordingly.

During the read stage of the image pipeline, the hardware generates a histogram of the image. The histogram is analyzed by the software to determine if the image is overexposed or underexposed. First, the histogram is scaled by a factor of four if it comes from a 2×2 binned image. If the brightest histogram value (except for a commandable number of allowable saturated pixels) exceeds a saturation threshold, the image is considered overexposed and the exposure time is scaled back. Otherwise the image is considered underexposed. Histogram

values are accumulated starting from the brightest bin down towards the dimmest bin, until the saturation threshold is exceeded. The brightness value that causes the sum to exceed the threshold is the actual image brightness. The exposure time is scaled by the ratio of the commanded target brightness to the actual brightness, after a background brightness is removed. The algorithm is characterized by uploadable parameters for the saturation threshold, allowable number of saturated pixels, overexposure fallback, and background brightness.

The algorithm described so far compensates for changes in scene brightness and filter wheel changes. The next step adjusts the exposure time further if the imager, binning mode, or filter selected for the next exposure does not match what was used in the test exposure. The exposure time is scaled by the ratio of the transmissivity (actually, the expected brightness in DN/s) of the old setup to the transmissivity of the new setup. An uploadable table of transmissivities for the WAC filters and for the NAC imager in either binning mode are used. Finally, the computed exposure time is forced to fall within an uploadable range but is always less than 1 second.

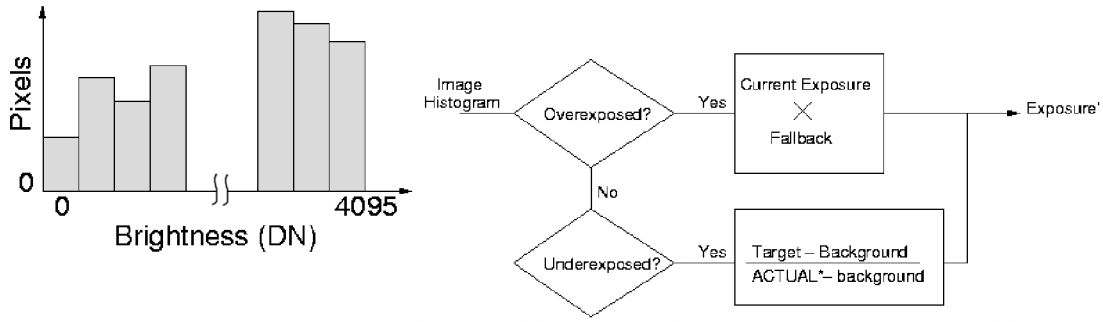

Anticipation:

$$\text{Exposure}'' = \text{Exposure}' \times \frac{\text{Transmissivity(previous camera, bin mode, filter)}}{\text{Transmissivity(current camera, bin mode, filter)}}$$

Figure 2-7: Autoexposure algorithm decision tree. A 64-bin histogram is computed in hardware for each image. If an image is determined to be underexposed, the actual exposure is computed as Actual = minimum brightness such that the sum of the pixels above this brightness < saturation threshold.

2.1.5 Optical Design

The WAC (Figure 2-8) consists of a 4-element refractive telescope having a focal length of 78 mm and a collecting area of 48 mm^2 (Table 2-9). The detector located at the focal plane is an Atmel (Thomson) TH7888A frame-transfer CCD with a 1024×1024 format and 14-µm pitch detector elements that provide a 179-µrad pixel (instantaneous) field-of-view (IFOV). See Appendix J for the Atmel TH7888A data sheet. A 12-position filter wheel provides color imaging over the spectral range of the CCD detector. Eleven spectral filters spanning the range from 395 to 1040 nm are defined to cover wavelengths diagnostic of different potential surface materials. The twelfth position is a broadband filter for optical navigation. The filters are arranged on the filter wheel in such a way as to provide complementary passbands (e.g., for 3-color imaging, 4-color imaging) in adjacent positions.

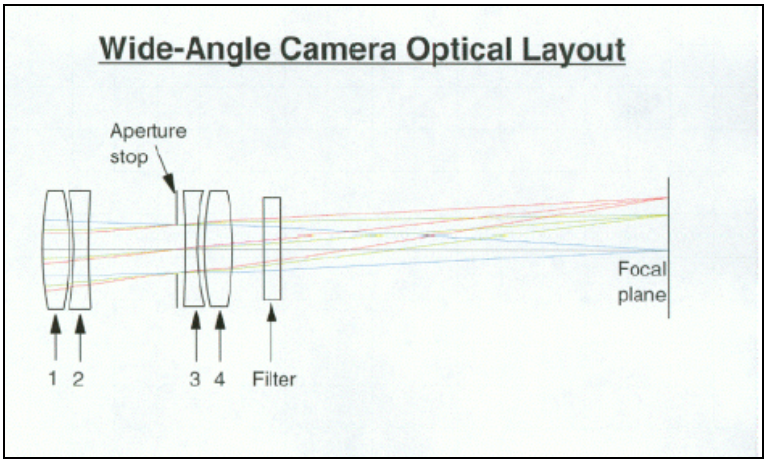

Figure 2-8: WAC optical layout.

	Narrow Angle	Wide Angle
Field of view	1.5° × 1.5°	10.5° × 10.5°
Pivot range (observational)	-40° to +50° (Sunward) (Planetward)	
Exposure time	1 ms to ~10 s	
Frame transfer time	<4 ms	
Image readout time†	1 s	
Spectral filters	1	12 positions
Spectral range	721–770 nm	395–1040 nm in clear filter
Focal length	550 mm	78 mm
Collecting area	462 mm²	48 mm²
NAC-WAC coalignment knowledge	0.01 deg (179 µrad)	
Spacecraft pointing knowledge	0.1 deg (1.75 mrad)	
Spacecraft knowledge	0.02 deg (350 µrad)	
Detector-TH7888A	CCD 1024×1024, 14-µm pixels	
IFOV	25 µrad	179 µrad
Pixel FOV	5.1 m at 200-km altitude	35.8m at 200-km altitude
Quantization	12-bits per pixel	
Compression	Lossless, multi-resolution lossy, 12-to-8 bits	

†Transfer to DPU; transfer from DPU to SSR limited to 3 Mbps (4 s to transfer 1024×1024 image).

Table 2-9: MDIS specifications.

The NAC (Figure 2-10) is an off-axis reflective telescope with an effective 550-mm focal length and a collecting area of 462 mm^2. The NAC focal plane is identical to the WAC's, providing a 25-µrad IFOV. The NAC has a single medium-band filter (50 nm wide), centered at 750 nm to match to the corresponding WAC filter for monochrome imaging.

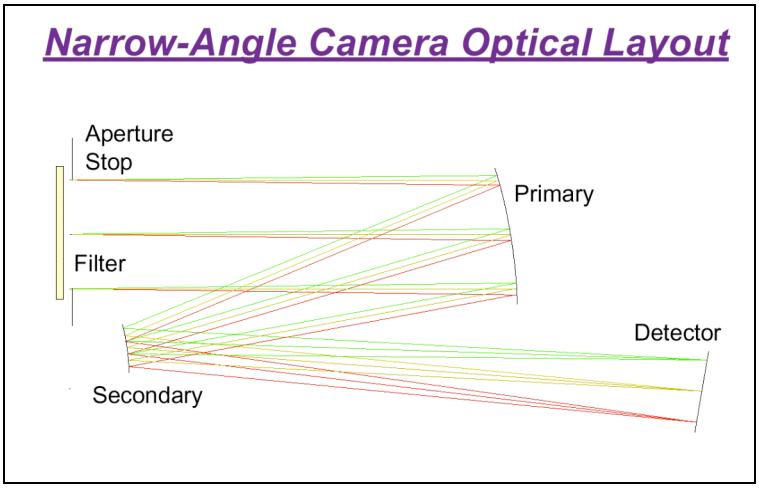

Figure 2-10: NAC optical layout.

2.1.6 Filters

The WAC camera utilizes a twelve position filter wheel with bandpasses from 430 to 1020 nm, including a broadband navigation filter centered at 750 nm. The NAC is a broadband BW imager with a center wavelength of 747 nm and a bandpass of 53 nm. Other than the image dimensions, the data products of each camera are identically formatted. Table 2-9 shows the focal length, collecting area, and field of view for each camera. Table 2-11 shows the filter wheel position and bandwidth parameters.

Filter Number	Filter Filename letter	Wavelength (Flight) (nm)	FWHM (Flight) (nm)	Total Thickness (mm)	Focal length (mm)	Scale change (%)
1	A	698.8	5.3	6.00	78.218	-0.104
2	B	700	600.0	6.00	78.163	-0.104
3	C	479.9	10.1	6.30	77.987	-0.329
4	D	558.9	5.8	6.30	78.023	-0.283
5	E	628.8	5.5	6.20	78.109	-0.173
6	F	433.2	18.1	6.00	78.075	-0.216
7	G	748.7	5.1	5.90	78.218	-0.033
8	H	947.0	6.2	5.20	78.449	0.262
9	I	996.2	14.3	5.00	78.510	0.340
10	J	898.8	5.1	5.35	78.390	0.186
11	K	1012.6	33.3 0	4.93	78.535	0.372
12	L	828.4	5.2	5.60	78.308	0.082

Table 2-11: WAC Filters Specifications – Wavelength and FWHM Measured at -26° C.

For WAC spectral filters, bandpass widths were selected to provide required SNR in exposure times sufficiently short to prevent linear smear by along-track motion, yet sufficiently long (>7 ms) to avoid excessive artifacts from removal of frame transfer smear during ground processing. SNR is not an issue, as sufficient light is available for SNRs >200, but saturation is a concern at low phase angles. At the same time, both cameras must be sufficiently sensitive to provide star images for optical navigation. When imaging Mercury against a star background, at least three stars must be visible per image at ≥ 7× noise with the clear filter.

2.1.7 Flatfield Non-uniformity

Response uniformity, or flat field, is a measure of pixel-to-pixel variations in responsivity. One significant non-uniformity in the data noted during ground calibration is that of dark spots scattered across the FOV of both imagers. The darker spots scattered across WAC images are fixed with respect to the CCD regardless of filter wheel setting, though their intensities do vary slightly with filter. The sizes of the spots are consistent with shadows of <<35-µm dust on the CCD window, and their number density is consistent with the standards for a class-10,000 clean room in which the camera was assembled. Also consistent with this hypothesis, following instrument vibration during environmental testing, the locations of several spots changed. With the exception of a single particle (arrow, Figure 2-12) the dust spots do not significantly affect the DN levels. The spots themselves also moved as the instrument was subjected to the vibrations of launch and flight. Images of an onboard calibration target inside the spacecraft adaptor ring as well as of the Venus cloud tops acquired during the second Venus flyby have been used to re-determine the flat field post-launch.

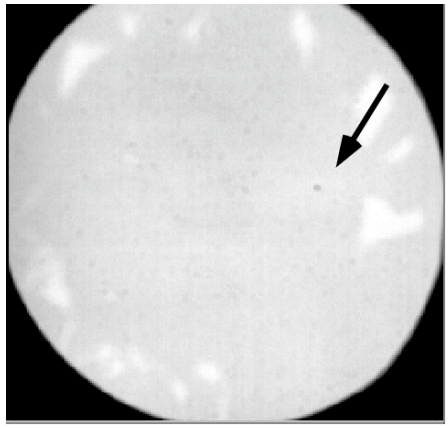

Figure 2-12: Non-uniformity due to dust particles is visible in integrating sphere images acquired through the quartz window in the OCF chamber door of the calibration facility.

To reduce noise in the derived flat field to approximately 10^{-3}, ~10 images have to be averaged together per filter, camera, and binning mode. When the images are dark-subtracted, de-smeared, averaged, and normalized to the image mean, the relative DN levels are nearly identical on a pixel-by-pixel basis.

2.1.8 Dark Columns

Dark models for MDIS images are created using either (a) dark images (usually acquired with MDIS stowed against the spacecraft deck) or (b) columns lying outside of the CCD's active area. In the full-frame mode for either the WAC or NAC, the first four columns of each image are taken from a region of the CCD that is never exposed to light and, thus, represents a dark level that is purely a function of bias and dark current. The dark columns are separated from the image section by five isolation columns to avoid diffusion of signal from the active area. When the image is read out, these four columns are mapped into the first four imaging columns, so the resulting image is a square 1024 by 1024 pixels, with the first four columns replaced with the sampled dark columns. The four dark columns behave identically to the scene as a function of row, exposure time, and temperature to within 0.26 DN.

In the binned mode for both cameras, true dark columns are unavailable. However, the second column of a binned image provides a lower response than a column in the active image area. This lower-response column does show a temperature- and exposure-time response that can be modeled, making it a functional "dark." Therefore, the dark column model simply uses the second column of an image (binned or full-frame) to be a representative of the dark strip properties.

Given the nature of the binned "dark" columns, it is tempting to rely on model (a) above exclusively, rather than dark current calibration images. However, the dark strips, even for binned data, serve as an indicator of the variations of the CCD's response to radiation, and, as such, a means to calibrate the changes in the behavior of the CCD with time. Thus, both dark models will be periodically re-evaluated en route to Mercury and during the orbital phase of the mission.

2.1.9 Pixel Shift Due to Pixel Binning

For either camera, a error in programming the Actel field-programmable gate arrays (FPGAs) that executes binning at the focal plane results in a different sampling of the CCDs. Binned images are sampled from a part of the CCD that is offset 8 unbinned pixels (4 binned pixels) in the direction of increasing sample number in the image. This difference in pointing is accounted for in the SPICE frames kernel.

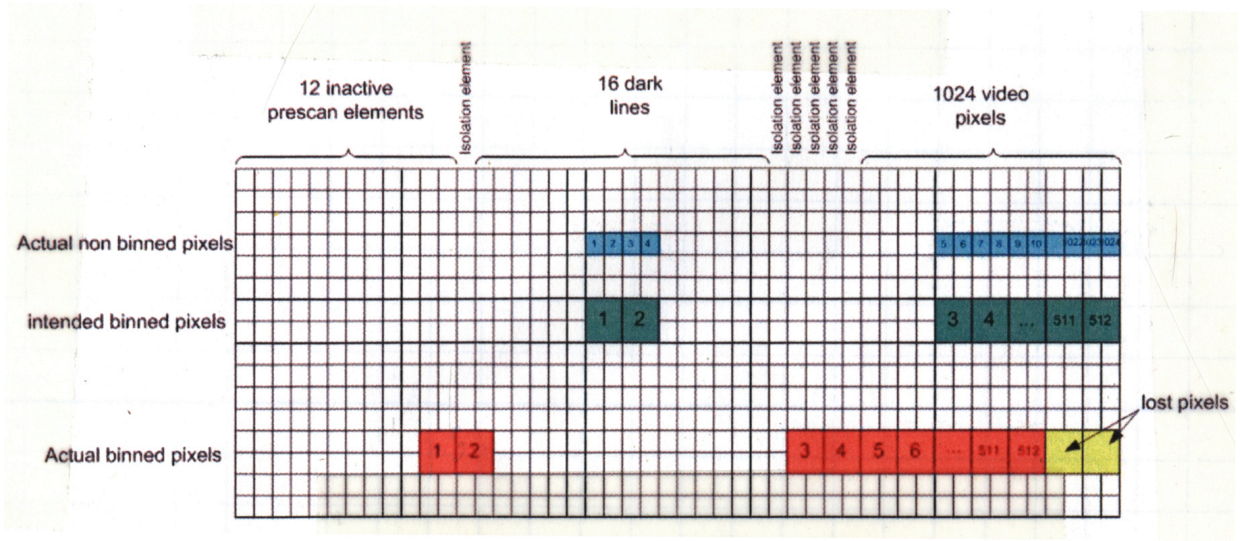

Figure 2-13: Pixels intended for dark columns, and actual pixels used in binned images for WAC and NAC.

2.2 Flyby Imaging Overview

The MESSENGER trajectory provides three flyby opportunities of Mercury: January 2008, October 2008, and September 2009. During the first flyby, approximately half of the hemisphere not viewed by Mariner 10 was illuminated (subsolar longitude 190°E); the first Mercury data returned from MESSENGER thus covered new terrain, including the previously unseen western half of the Caloris Basin and its ejecta. During the second flyby, illumination will be centered on the eastern edge of the Mariner 10 hemisphere (subsolar longitude 4°E). The lighting geometry for the third encounter will be nearly identical to that of the second encounter with the subsolar point at the prime meridian (0°E); the approach and departure phase angles will be less extreme, however, resulting in better inbound imaging. During the second and third flybys, most of the remaining unseen portion of Mercury will be imaged. Total coverage between Mariner 10 and the three flybys will exclude only the poles and a small longitudinal gap ~6°-wide, centered at ~97°E longitude.

During each of the flybys, three types of image mosaics will be acquired. First, MDIS-NAC will cover > 80% of the planet at a resolution averaging ~500 m/pixel, providing a first version of a global basemap. (Later, orbital observations at higher resolution will image most of the planet at a near-nadir geometry.) Second, MDIS-WAC will image the planet in 11 filters at ~2.4 km/pixel. Finally, high-resolution NAC mosaics swaths will cover selected areas at about 200 m/pixel.

Creating albedo maps from imaging at various photometric geometries obtained during the flybys and from orbit will require an accurate photometric model of the planet at the wavelengths of the NAC and WAC filters. Therefore, MESSENGER will perform a multi-geometry photometric characterization of Mercury's surface from data acquired during the flybys, through observations of the same point on the ground acquired at the same incidence angle but different emission, and phase angles. Orbital photometric observations will complement the flyby photometry by tracking a representative area at a fixed emission angle during the time when the planet's rotation varies the incidence angle as the target region moves from the terminator to near the sub-solar longitude.

2.3 Orbital Imaging Overview

MESSENGER will be placed in a highly elliptical orbit with a periapse of 200 km at ~64˚N and an apoapse of 13100 km. The orbit has a 12-hour period, is inclined 80˚ to the planet's equatorial plane, and is not sun-synchronous. During one Mercurian solar day, the orbit precesses completely around the planet twice. At times the groundtrack is near the terminator; 22 days later it passes over the sub-solar point.

2.3.1 Global Monochrome Basemap

One of the primary goals of MDIS is to acquire a global monochrome basemap at ~250-m/pixel average spatial sampling, low emission angle, and moderate incidence angle (45˚-80˚). For a given area, coverage is obtained at the first opportunity when local nadir is viewed at solar incidence angles of 55˚-75˚. Selection of the combination of emission and incidence angles dictates that the spacecraft will be nearly in a dawn-dusk orbit, minimizing thermal disturbances to pointing. The choice of NAC or WAC camera is driven by the necessity of maintaining both cross-track overlap and near uniform spatial resolution (140 m/pixel): the NAC will be used to image the southern hemisphere, whereas the WAC will be used in the northern hemisphere. For monochrome imaging, the 750 nm filter is used in the WAC to match the 750 nm bandpass of the NAC. The global nadir-viewing basemap is planned for completion during the first Mercurian solar day (i.e., during the first half of the orbital mission).

2.3.2 Stereo Mapping

The off-nadir stereo-complement to the basemap will consist of images taken at nearly the same local solar time. This occurs with the spacecraft in the same nearly dawn-dusk orbit, again minimizing the thermal disturbance to pointing and the propagation of pointing uncertainty into uncertainty in southern-hemisphere elevations. Off-nadir pointing will be accomplished using the capability of the guidance and control system to point up- or down-track at commandable angular offsets.

2.3.3 Gap-filling the Flyby Color Map

Once in orbit, the remaining gaps (90˚ and 270˚ longitudes) in the flyby color maps will be filled. As with the monochrome basemap, imaging is at low emission angles. However, in contrast to

the basemap, low incidence angles will be used. The goal is to fill the gaps in 8 colors, and to image areas obscured during the flybys at higher spatial resolution.

2.3.4 Polar Mapping

In order to identify permanently shadowed (and permanently illuminated) areas, polar regions will be imaged repeatedly throughout the Mercurian solar day during every second orbit, so that all longitudes are illuminated at 5˚ increments of solar longitude. This strategy provides coverage of all areas near their minimum solar incidence angle. Coverage will extend from 85˚ or lower latitude to the pole on the nightside, and from 80˚ or lower latitude to the pole on the dayside.

At the south pole, the campaign will be divided between the two solar days. On the first solar day, the WAC will be used while the spacecraft is at high altitude, providing ~1.5 km spatial sampling and extending equatorward to approximately 70˚ latitude on the dayside. On the second solar day a more limited region will be covered at higher resolution, using one 2x3 NAC mosaic per day with long axis aligned N-S. The latter provides about 200 m/pixel spatial sampling.

For the northern polar region, the entire first solar day is required for the monochrome basemap, so the polar campaign will be delayed until the second solar day. The WAC will be used because its wider FOV is required for latitude coverage. The imaging strategy will parallel that used for the NAC in the southern polar region, using one 2x3 mosaic per day with long axis aligned N-S.

2.3.5 High-resolution Imaging

Selected areas of the northern hemisphere, identified for the most part in flyby imaging, will be imaged from orbit at resolutions of up to ~20 m/pixel. The NAC has a “fast” 1 Hz mode for this purpose, which will acquire images binned 2x2 on-chip in continuous strips 512 pixels wide. At low dayside altitudes (280 km), spatial sampling is 11 m/pixel but along-track motion smear is 18 m at the shortest exposure consistent with low artifacts from frame transfer smear. Due to MESSENGER’s highly elliptical orbit, high-resolution imaging is possible only in the northern hemisphere.

2.3.6 Targeted Color

Selected regions of the planet will be targeted on the second solar day for full-resolution color imaging with spatial sampling up to ~400 m/pixel using the ability of the guidance and control system to track a commanded latitude and longitude on the surface. The maximum spacecraft angular velocity dictates the minimum altitude and thus best spatial sampling at which this can be done. Initial targets will be identified from Mariner 10 data and MESSENGER flyby results.

2.3.7 Color Photometry

During the orbital phase of the mission, photometric geometry complementary to that measured during the flybys is possible: incidence angle variations will be measured at nearly constant emission angle. Key features in low southern latitudes will be imaged repeatedly while the spacecraft is high (10,000 km) above high southern latitudes as the sub-solar point moves from terminator to near noon-time. Several target areas will be selected: one to represent average Mercury (heavily cratered highlands), another representing intercrater plains, and a third representing smooth plains materials (probably Tolstoj plains).

Including the flyby and orbital observations, the photometric properties of Mercury will be characterized over greater than 80° of emission angle, 100° of phase angle, and 80° of incidence angle. Results from this experiment will not only characterize photometric properties of the surface, but also support a photometric model to correct imaging to a standard geometry (30° solar incidence angle, 0° emission angle) for production of mosaicked products.

2.3.8 On-orbit Calibrations

In order to maintain accuracy of southern-hemisphere elevation measurements, pointing calibrations will be interleaved with nadir and off-nadir global mapping. Periodically, MDIS will be pointed off the planet's limb using the pivot, and star images will be acquired at two positions within the gimbal plane that are separated by tens of degrees. Each image is used to solve for a vector lying within the gimbal plane, and the pair of vectors is used to solve for the plane itself. Repetition of this calibration will track temporal changes in the orientation of the gimbal plane due to thermal distortions of the spacecraft structure.

2.4 Data Product Overview

The MDIS archive is composed of four higher-level data sets: CDRs, DDRs, BDRs, and MDRs, each briefly described below and listed in Table 2-14. More detailed descriptions can be found in section 3.5.

2.4.1 CDRs

The Calibrated Data Record (CDR) data set consists of single-frame calibrated images in units of radiance, I/F, or reflectance corrected to i = 30º, e = 0º as 32-bit PC_REAL. CDRs are not geometrically corrected. See section 3.5.10 for a more detailed description of the CDRs.

2.4.2 DDRs

The Derived Data Record (DDR) data set consists of single images that have 5 bands of data as 32-bit PC_REAL: (a) latitude, (b) longitude, (c) incidence angle, (d) emission angle, and (e) phase angle. See section 3.5.11 for a more detailed description of the DDRs.

2.4.3 BDRs

The Map Projected Basemap RDR (BDR) data set consists of a global monochrome map of I/F or reflectance corrected to i = 30º, e = 0º at a resolution of 256 pixels per degree. Each of 60 map tiles is composed of 2 layers corresponding to the WAC and NAC detectors. Each layer has 5 backplanes in a separate file: (a) incidence angle, (b) emission angle, (c) phase angle, (d) mission elapsed time (MET), and (e) slant range. See section 3.5.12 for a more detailed description of the BDRs.

2.4.4 MDRs

The Map Projected Multispectral RDR (MDR) data set consists of a global color map of I/F or reflectance corrected to i = 30º, e = 0º at a resolution of 64 pixels per degree. Each of 60 map tiles is composed of 11 layers corresponding to the 11 WAC filters. Each layer has 5 backplanes in a separate file: (a) incidence angle, (b) emission angle, (c) phase angle, and (d) mission elapsed time (MET), and (e) slant range. See section 3.5.13 for a more detailed description of the MDRs.

Data Product	PDS Data Set ID	Data Processing Level	Example PDS Labels
Experiment Data Record (EDR)	MESS-E/V/H-MDIS-2-EDR-V1.0	2	See EDR SIS
Calibrated Data Record (CDR)	MESS-E/V/H-MDIS-4-CDR-CALDATA-V1.0	4	Section 3.5.10 Appendix C
Derived Data Record (DDR)	MESS-E/V/H-MDIS-6-DDR-GEOMDATA-V1.0	6	Section 3.5.11 Appendix D
Map Projected Basemap RDR (BDR)	MESS-E/V/H-MDIS-5-BDR-V1.0	5	Section 3.5.12 Appendix E
Map Projected Multispectral RDR (MDR)	MESS-E/V/H-MDIS-5-MDR-V1.0	5	Section 3.5.13 Appendix F

Table 2-14: Definitions of MDIS data products. EDRs are not described in this document.

2.5 Data Processing

2.5.1 Data Processing Level

Data from the MESSENGER WAC and NAC are archived together. The archive includes level 2 (and above) Committee on Data Management and Computation (CODMAC) data (Table 2-15), standard data products, and documentation describing the generation of the products. Each MDIS data product has a unique file name and follows a specified file naming convention (see section 3.5).

NASA	CODMAC	Description
Packet data	Raw - Level 1	Telemetry data stream as received at the ground station, with science and engineering data embedded.

NASA	CODMAC	Description
Level-0	Edited - Level 2	Instrument science data (e.g., raw voltages, counts) at full resolution, time ordered, with duplicates and transmission errors removed.
Level 1-A	Calibrated - Level 3	Level 0 data that have been located in space and may have been transformed (e.g., calibrated, rearranged) in a reversible manner and packaged with needed ancillary and auxiliary data (e.g., radiances with the calibration equations applied).
Level 1-B	Resampled - Level 4	Irreversibly transformed (e.g., resampled, remapped, calibrated) values of the instrument measurements (e.g., radiances, magnetic field strength).
Level 1-C	Derived - Level 5	Level 1A or 1B data that have been resampled and mapped onto uniform space-time grids. The data are calibrated (i.e., radiometrically corrected) and may have additional corrections applied (e.g., terrain correction).
Level 2	Derived - Level 5	Geophysical parameters, generally derived from Level 1 data, and located in space and time commensurate with instrument location, pointing, and sampling.
Level 3	Derived - Level 5	Geophysical parameters mapped onto uniform space-time grids.
	Ancillary – Level 6	Data needed to generate calibrated or resampled data sets.

Table 2-15: Processing Levels for Science Data Sets.

2.5.2 Data Product Generation

MESSENGER WA and NA image CDRs and RDRs are produced by the MESSENGER Science Operations Center (SOC) operated jointly by APL and ACT. In some cases they are also generated by members of the MESSENGER science team. The CDRs are generated from EDRs through a data pipeline that corrects the EDRs for dark counts, flat field effects, bad pixels, and other similar processes.

At the end of the evaluation and validation period, the data are organized and stored in the directory structure described in section 3.5, along with fiduciary checksums for transmittal to the PDS Imaging node. The transmittal process is described in section 2.5.3. These products will be used for engineering support, direct science analysis, and construction of other science products.

2.5.2.1 CDR Generation

2.5.2.1.1 Radiance CDRs

Laboratory and in-flight measurements were used to derive values for the terms of the calibration equation (shown in Equation 1 below) for both the WAC and NAC. Details of how these measurements were made can be found in Hawkins et al. (in press, 2007) [Applicable Document 9]. Both instruments measure relative light intensity in engineering units referred to as data number [DN]. DNs are generally converted to radiance, R (W m^{-2}-μm^{-1}-sr^{-1}), following the calibration equation:

$$\mathrm{R}(x,y,f,T,\tau,b) = \frac{[\mathrm{DN}(x,y,f,T,\tau,b,MET) - \mathrm{Dk}(x,y,T,\tau,b,MET)] - \mathrm{Sm}(x,y,\tau,b) - \mathrm{Scat}(x,y,f,\tau,b)}{\mathrm{Flat}(x,y,f,b) * \mathrm{Coef}(f,b) * \mathrm{Resp}(f,T) * \tau} \qquad [1]$$

where:

DN(x,y,f,T,τ,b,MET) is the raw DN measured by the pixel in column x, row y, through filter f, at CCD temperature T and exposure time τ, for binning mode b, and Mission Elapsed Time (MET),

Dk(x,y,T,τ,b,MET) is the dark level in a given pixel, derived either from the dark strip or estimated from exposure time and CCD temperature,

Sm(x,y,τ,b) is the scene-dependent frame transfer smear for the pixel,

Scat(x,y,f,τ,b) is the contribution of scattered light from elsewhere in the scene,

Flat(x,y,f,b) is the non-uniformity or "flat-field" correction at this pixel location,

Coef(f,b) is the responsivity, relating dark-, flat-, and smear-corrected DN per unit exposure time to radiance,

Resp(f,T) is the responsivity relative to the baseline operating temperature, and,

τ is the exposure time in milliseconds.

2.5.2.1.2 I/F CDRs

To convert from radiance to I/F (also known as radiance factor, the ratio of measured radiance to that which would be measured from a white perfectly Lambertian surface), the following expression should be applied:

I_over_F(f) = L(f) * pi * (SOLAR_DISTANCE/149597870.691)^2 / F(f) [2]

where:

L(f) is calibrated radiance calculated as described above for some filter f,

SOLAR_DISTANCE is that value for distance of the target object from the center of the Sun in kilometers (as indicated by the keyword SOLAR_DISTANCE),

149597870.691 is the number of kilometers in 1 AU,

F(f) is effective average solar irradiance sampled under the filter bandpass (Table 2-16).

Imager	Filter Number	Band Center	Bandwidth	Solar Irradiance
NAC	N/A	747.70	52.55	1278.85
WAC	1	698.76	5.30	1429.10
	2	701.27	196.51	1432.13
	3	479.87	10.14	2091.95
	4	558.91	5.82	1833.26
	5	628.81	5.52	1669.08
	6	433.21	18.11	1733.07
	7	748.73	5.09	1293.93
	8	947.03	6.15	813.27
	9	996.23	14.30	741.46
	10	898.80	5.08	900.80
	11	1012.56	33.33	714.15
	12	828.39	5.20	1062.92

Table 2-16: Solar irradiance used to convert radiance to units of I/F.

2.5.2.2 DDR Generation

The sequence of processing that creates a DDR is as follows. Gimbal positions are extracted from the gimbal C kernel. Using that and other SPICE kernels, the equipotential surface intercept is calculated for each spatial pixel. The angles of this pixel relative to the equatorial plane and reference longitude constitute the latitude and longitude of the pixel. For that latitude and longitude, solar incidence, emission, and phase angles are determined.

2.5.2.3 RDR Generation

The sequence of processing that creates an MDR or BDR from CDRs and DDRs (Figure 2-17) is as follows:

(a) EDRs are assembled from raw data.

(b) The radiance images in CDRs are created from the EDRs and calibration files.

(c) Radiance CDRs are converted to I/F CDRs by dividing by (pi * solar flux at 1 AU * heliocentricdistance^2).

(d) Optionally, I/F is converted to reflectance through a photometric correction to i = 30º, e = 0º.

(e) Gimbal positions are extracted from the EDR housekeeping and formatted as a gimbal C kernel.

(f) Using the gimbal C kernel and other SPICE kernels, DDRs are created. The surface intercept on Mercury's equipotential surface is calculated for each spatial pixel. The angles of this pixel relative to the equatorial plane and reference longitude constitute the latitude and longitude of the pixel. For that latitude and longitude, solar incidence, emission, and phase angles are determined.

(g) CDRs in I/F, radiance, or reflectance corrected to i = 30º, e = 0º from the WAC and/or NAC are map projected into multiband BDRs or MDRs using the latitude and longitude information in the DDRs. The same procedure is used on DDRs to assemble the backplane file with derived information.

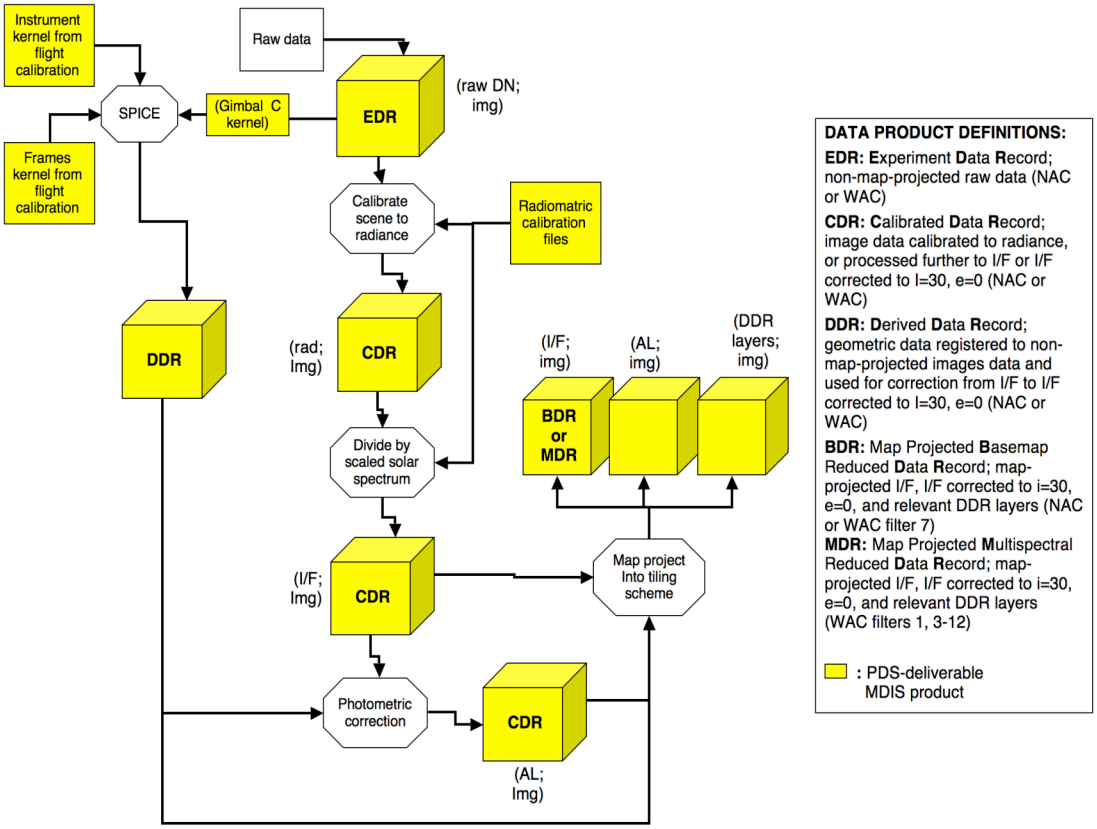

Figure 2-17: Sequential processing of EDRs to yield RDRs, showing roles of CDRs and DDRs.

2.5.3 Data Flow and Transmittal to PDS

The MESSENGER Science Operations Center (SOC) operates under the auspices of the MESSENGER Project Scientist to plan data acquisition and generate and validate data archives. The SOC supports and works with the Mission Operations Center (MOC), the Science Team, instrument scientists, and the PDS.

The SOC is located at JHU/APL. The SOC produces early versions of products that can be used by the science and instrument teams. They will be of the same type, content, and format as the final science products with default information for unknown data such as pointing and spacecraft housekeeping.

At the end of the evaluation and validation period, the data are organized and stored in the directory structure described in section 3.5, along with fiduciary checksums. This directory structure is compressed into a single "zip archive" file for transmittal to the imaging PDS node. The zip archive preserves the directory structure internally so that when it is decompressed the original directory structure is recreated at the PDS node. The zip archive is transmitted to the

PDS node via FTP to a specified URL.

2.5.4 Transmittal Time Line

Several MDIS archive releases, as detailed in Table 2-18, will be assembled and transmitted to PDS. At least two weeks before the deadline for transmittal, the zip archive file will be transmitted, via FTP, to the PDS node. At the same time, a letter of transmittal will be sent which provides an independent record of the fiduciary checksums provided in the archive file itself. Within several days of transmittal, the node will acknowledge receipt (but not verification) of the archive and letter of transmittal. If acknowledgement is not received, or if problems are reported, the MESSENGER SOC will immediately take corrective action to effect successful transmittal.

After transmittal, the PDS node will uncompress the zip archive file and independently calculate the fiduciary checksums for each file. The calculated checksums will be compared to the checksums in the transmittal letter to those recorded in the archive itself. The node will then perform any additional verification and validation of the data provided and will report any discrepancies or problems to the MESSENGER SOC. It is expected that the node will perform these checks and inspections in about two weeks. After inspection has been completed to the satisfaction of the PDS node, the node will issue to the MESSENGER SOC acknowledgement of successful receipt.

Milestone	Date	Release	Rel. Date*	Products
Launch (L)	08/03/04	Release 1 L + 6 months	Done	On-ground calibration data
Earth Flyby (EF)	08/02/05	-	-	-
Venus Flyby 2 (VF2)	06/05/07	Release 2 VF2 + 6 months	12/15/07	EDRs from EF and VF2 SPICE files used in processing data
Mercury Flyby 1 (MF1)	01/14/08	Release 3 MF1 + 6 months	7/15/08	EDRs from MF1 CDRs** from EF, VF2, and MF1 Calibration files Re-processed EDRs (if needed) SPICE files used in processing data
Mercury Flyby 2 (MF2)	10/06/08	Release 4 MF2 + 6 months	4/15/09	EDRs from MF2 CDRs from MF2 Re-processed EDRs and CDRs (if needed) Calibration files SPICE files used in processing data

Mercury Flyby 3 (MF3)	09/29/09	Release 5 MF3 + 6 months	3/15/10	EDRs from MF3 CDRs from MF3 Re-processed EDRs and CDRs (if needed) Calibration files SPICE files used in processing data
Mercury Orbit Insertion (MOI)	03/18/11	Release 6 MOI + 6 months	9/15/11	EDRs for first 2 months of orbital operations CDRs for first 2 months of orbital operations Calibration files Re-processed EDRs and CDRs (if needed) SPICE files used in processing data
Orbital 1	09/18/11	Release 7 MOI + 12 months	3/15/12	EDRs for months 3-6 of orbital operations CDRs for months 3-6 of orbital operations Calibration files Re-processed EDRs and CDRs (if needed) SPICE files used in processing data
Orbital 2 (EOO)	03/18/12	Release 8 EOO + 6 months	9/15/12	EDRs for months 7-12 of orbital operations CDRs for months 7-12 of orbital operations Re-processed EDRs and CDRs (if needed) Calibration files from all instruments SPICE files used in processing data
End Of Mission (EOM)	03/18/13	Release 9 EOM	3/15/13	Re-processed EDRs and CDRs (if needed) DDRs BDRs and MDRs Final calibration files SPICE files used in processing data Engineering data

* The release dates shown are the dates that PDS releases the products to the public. MESSENGER will deliver the products to PDS at least two weeks prior to these dates.
** Delivering full CDRs as part of Release 3 is a goal. At a minimum, calibration algorithm descriptions will be delivered along with the EDRs and calibration files to assure that science can be proposed based on the MF1 data.

Table 2-18: Schedule of MDIS Data Releases by Mission Phase. Adapted from DMSAP (Applicable Document 4).

2.6 Standards Used in Generating Data Products

2.6.1 PDS Standards

The MDIS data products comply with the PDS standards for file formats and labels, specifically the PDS image and table data objects [Applicable Documents 2 and 3]. Please see Appendix A for definitions of PDS data archive terms.

2.6.2 Time Standards

Two time standards are used in MDIS data products:

- spacecraft time in seconds (PDS label keywords SPACECRAFT_CLOCK_START_-COUNT and SPACECRAFT_CLOCK_STOP_COUNT)
- UTC (PDS label keywords START_TIME, STOP_TIME, and PRODUCT_CREA-TION_TIME)

2.6.3 Coordinate Systems

The following bulleted list outlines the computational assumptions for the geometric and viewing data provided in the PDS label. There are two coordinate systems in use: 1) the celestial reference system used for target and spacecraft position and velocity vectors, and camera pointing; and 2) the planetary coordinate system for geometry vectors and target location. The celestial coordinate system is J2000 (Mean of Earth equator and equinox of J2000). The planetary coordinate system is planetocentric with respect to a reference ellipsoid (sphere with 2440 km radius).

COMPUTATIONAL ASSUMPTIONS

- The mid-point time of observation is used for the geometric element computations.
- Label parameters reflect observed, not true, geometry. Therefore, light-time and stellar aberration corrections are used as appropriate.
- The inertial reference frame is J2000 (also called EME2000).
- Target body latitudes and longitudes are planetocentric. The initial agreed upon Mercury ellipsoid is a sphere with a 2440 km radius.
- The "sub-point" of a spacecraft on a target body is defined by the surface intercept of the spacecraft-to-target-body-center vector. This point is not necessarily the closest point on the target body to the spacecraft. This definition gives sub-point latitude and longitude that are independent of the target's reference ellipsoid.
- Distances are in km, speeds in km/sec, angles in degrees.
- Angular rates in degrees/sec, unless otherwise noted.
- Angle ranges are 0 to 360 degrees for azimuths and local hour angle. Longitudes range from 0 to 360 degrees (positive to the East). Latitudes range from -90 to 90 degrees.

2.6.4 Data Storage Conventions

The data are organized following PDS standards and transferred to the PDS for distribution to the science community. Data will be stored under unique file names as defined in Section 3.5.

2.7 Data Validation

Data validation falls into two types, validation of the science data and validation of the compliance of the archive with PDS archiving and distribution requirements. The first type of validation will be carried out by the Science Team, and the second will be overseen by the PDS, in coordination with the Science Team.

The formal validation of data content, adequacy of documentation, and adherence to PDS archiving and distribution standards is subject to an external peer review. The peer review will be scheduled and coordinated by the PDS. The peer review process may result in "liens," actions recommended by the reviewers or by PDS personnel to correct the archive. All liens must be resolved by the dataset provider: the SOC for Level 1 data, and the Science Team for higher-level data products, calibration data, and calibration algorithms. Once the liens are cleared, PDS will do a final validation prior to packaging and delivery.

The SOC will periodically report results of validation to the Science Steering Committee. If the volumes are approved for release by the Project, then the SOC will transfer the archives to the PDS [Applicable Document 4].

3. DETAILED DATA PRODUCT SPECIFICATIONS

3.1 Data Product Structure and Organization

Data that comprise the MESSENGER Image Archive are formatted according to the standards of the Planetary Data System, as documented in the PDS Standards Reference manual [Applicable Document 3]. Archive-quality data sets include everything needed to understand and utilize the data. The raw images by themselves are insufficient for the science community to realize the full scientific potential of the data. Thus, the MESSENGER project is providing as part of the archive the ancillary data to perform radiometric, photometric, and cartographic processing. Additionally, a documentation set is provided to describe the data products, imaging instruments, and mission operations.

3.2 Geometric Elements

Geometric elements fully describe the viewing geometry of each observation. The geometric elements are organized according to the SPICE kernel concepts adopted by the Navigational Ancillary Information Facility (NAIF) at the Jet Propulsion Laboratory. SPICE is an acronym for Spacecraft, Planet, Instrument, C-matrix, and Event kernels (see http://naif.jpl.nasa.gov).

SPICE kernels evolve and improve as further analysis is done. The PDS data labels attached to the image data products are based on the most up-to-date SPICE information available at the time of product creation.

3.3 Archive Volume Structure and Contents

This section describes the contents of the MDIS Archive volumes, including the file names, file contents, file types, and organization responsible for providing the files. The indication that a file is required means that it is required by the PDS standards for archive volumes, as specified in the PDS Standards Reference, Applicable Document 3. See Appendix A for definitions of data archive terms.

An MDIS archive volume will contain the following directories below the root. The first five are always present, if applicable (the CALIB directory is only relevant to the CDR volumes).

LABEL is present only if needed, and BROWSE and EXTRAS are populated on a best-effort basis.

- INDEX
- CATALOG
- DOCUMENT
- DATA (named CDR, DDR, BDR, or MDR based on product type)
- CALIB
- LABEL
- BROWSE
- EXTRAS

3.3.1 Root Directory

Files in the Root Directory (Table 3-1) include an overview of the archive, a description of the volume for the PDS Catalog, and a list of errata or comments about the archive. The following files are contained in the Root Directory.

File Name	Required?	File Contents
AAREADME.TXT	Yes	General information file. Provides users with an overview of the contents and organization of the associated volume, general instructions for its use, and contact information. This file contains the fiduciary checksums calculated for the files in the archive.
ERRATA.TXT	No	Text file for identifying and describing errors and/or anomalies found in the current volume, and possibly previous volumes of a set. Any known errors for the associated volume will be documented in this file.
VOLDESC.CAT	Yes	PDS file containing the VOLUME object. This gives a high-level description of the contents of the volume. Information includes: production date, producer name and institution, volume ID, etc.

Table 3-1: Root Directory Contents.

3.3.2 Index Directory

Files in the Index Directory (Table 3-2) are provided to help the user locate products on the archive volume. The following files are contained in the Index Directory.

File Name	Required?	File Contents

INDXINFO.TXT	Yes	Identifies and describes the function of each file in the index subdirectory. This includes a description of the structure and contents of the index table and usage notes.
INDEX.TAB	Yes	The image index file is organized as a table: there is a row for each image on the volume; the columns contain parameters that describe the observation and camera states of the images. Information includes viewing geometry (such as latitude and longitude of the image center, sun and observation angles) and camera state information such as filter wheel position, spacecraft clock count, time of observation, image integration time, and camera modes.
INDEX.LBL	Yes	Detached PDS label for INDEX.TAB that describes its organization and contents.

Table 3-2: Index Directory Contents.

Tables 3-3 and 3-4 list the columns in the CDR/DDR and BDR/MDR index files, respectively. They are the most significant keywords pulled from labels of the various products. The lists are comprehensive in the sense that they include the important keywords for all data products. For any given data product, some of the fields are inapplicable and will be set to N/A.

Column	Format	Length (bytes)	Example
VOLUME_ID	CHARACTER	12	MSGRMDS_1001
FILE_SPECIFICATION_NAME	CHARACTER	40	“CDR/2007/2007_156/089570568G_RA_0.IMG”
PRODUCT_ID	CHARACTER	19	“CW0089570568G_RA_0” “DW0089570568G_DE_0”
DATA_QUALITY_ID	CHARACTER	16	“0000001000000000”
MISSION_PHASE_NAME	CHARACTER	15	"VENUS 2 FLYBY"
TARGET_NAME	CHARACTER	7	VENUS
SEQUENCE_TITLE	CHARACTER	26	“07156_APP_WAC_MOSAIC_1”
PRODUCT_CREATION_TIME	TIME	22	2007-11-13T23:30:37
START_TIME	TIME	26	2007-06-05T22:40:41.702888
STOP_TIME	TIME	26	2007-06-05T22:40:41.768887
SPACECRAFT_CLOCK_START_COUNT	CHARACTER	19	“1/0089570568:924000”
SPACECRAFT_CLOCK_STOP_COUNT	CHARACTER	19	“1/0089570568:990000”
INSTRUMENT_ID	CHARACTER	8	"MDIS-WAC"
FILTER_NAME	CHARACTER	10	“750 BP 5”
FILTER_NUMBER	ASCII_INTEGER	2	7
CENTER_FILTER_WAVELENGTH	ASCII_INTEGER	6	750 <NM>
EXPOSURE_DURATION	ASCII_INTEGER	4	66 <MS>
EXPOSURE_TYPE	CHARACTER	6	AUTO
DETECTOR_TEMPERATURE	ASCII_REAL	8	-39.86 <degC>

Column	Format	Length (bytes)	Example
FOCAL_PLANE_TEMPERATURE	ASCII_REAL	8	-20.19 <degC>
FILTER_TEMPERATURE	ASCII_REAL	8	-20.66 <degC>
OPTICS_TEMPERATURE	ASCII_REAL	8	-20.85 <degC>
MESS:PIV_POS	ASCII_INTEGER	6	9007
MESS:FPU_BIN	ASCII_INTEGER	1	0
MESS:COMP12_8	ASCII_INTEGER	1	0
MESS:COMP_ALG	ASCII_INTEGER	1	2
MESS:COMP_FST	ASCII_INTEGER	1	1
MESS:WVLRATIO	ASCII_INTEGER	2	4
MESS:PIXELBIN	ASCII_INTEGER	1	0
MESS:SUBFRAME	ASCII_INTEGER	1	0
RETICLE_POINT_RA_1	ASCII_REAL	9	182.77358 <DEG>
RETICLE_POINT_RA_2	ASCII_REAL	9	172.41885 <DEG>
RETICLE_POINT_RA_3	ASCII_REAL	9	181.37369 <DEG>
RETICLE_POINT_RA_4	ASCII_REAL	9	170.89950 <DEG>
RETICLE_POINT_DECLINATION_1	ASCII_REAL	8	0.76231 <DEG>
RETICLE_POINT_DECLINATION_2	ASCII_REAL	8	2.21637 <DEG>
RETICLE_POINT_DECLINATION_3	ASCII_REAL	8	-9.59692 <DEG>
RETICLE_POINT_DECLINATION_4	ASCII_REAL	8	-8.12579 <DEG>
SLANT_DISTANCE	ASCII_REAL	11	14090.89871 <KM>
CENTER_LATITUDE	ASCII_REAL	10	35.73941 <DEG>
CENTER_LONGITUDE	ASCII_REAL	10	226.54464 <DEG>
HORIZONTAL_PIXEL_SCALE	ASCII_REAL	10	2530.43332 <M>
SMEAR_MAGNITUDE	ASCII_REAL	10	10.38328 <PIXELS>
RETICLE_POINT_LATITUDE_1	ASCII_REAL	8	“N/A”
RETICLE_POINT_LATITUDE_2	ASCII_REAL	8	47.22207 <DEG>
RETICLE_POINT_LATITUDE_3	ASCII_REAL	8	24.61941 <DEG>
RETICLE_POINT_LATITUDE_4	ASCII_REAL	8	20.95210 <DEG>
RETICLE_POINT_LONGITUDE_1	ASCII_REAL	9	“N/A”
RETICLE_POINT_LONGITUDE_2	ASCII_REAL	9	244.79392 <DEG>
RETICLE_POINT_LONGITUDE_3	ASCII_REAL	9	208.68936 <DEG>
RETICLE_POINT_LONGITUDE_4	ASCII_REAL	9	239.57209 <DEG>
SOLAR_DISTANCE	ASCII_REAL	15	108040911.97274 <KM>
SUB_SOLAR_AZIMUTH	ASCII_REAL	10	11.49240 <DEG>
SUB_SPACECRAFT_LATITUDE	ASCII_REAL	10	14.91164 <DEG>
SUB_SPACECRAFT_LONGITUDE	ASCII_REAL	10	246.92915 <DEG>
SPACECRAFT_ALTITUDE	ASCII_REAL	11	13114.84420 <KM>
SUB_SOLAR_LATITUDE	ASCII_REAL	10	-1.29302 <DEG>
SUB_SOLAR_LONGITUDE	ASCII_REAL	10	283.86863 <DEG>
INCIDENCE_ANGLE	ASCII_REAL	10	64.85698 <DEG>
PHASE_ANGLE	ASCII_REAL	10	30.69683 <DEG>
EMISSION_ANGLE	ASCII_REAL	10	39.19187 <DEG>
MAP_SCALE	ASCII_REAL	13	0.66532496501 <KM/PIXEL>

Table 3-3: CDR/DDR Index Table Contents.

Column	Format	Length (bytes)	Example
VOLUME_ID	CHARACTER	12	MSGRMDS_1001
FILE_SPECIFICATION_NAME	CHARACTER	40	“BDR/H10/ BDRIF_25N000_0256_1.IMG”
PRODUCT_ID	CHARACTER	19	“BDRIF_25N000_0256_1” “MDRIF_25N000_0064_1”
PRODUCT_TYPE	CHARACTER	31	“MAP_PROJECTED_BASEMAP_RDR” “MAP_PROJECTED_MULTISPECTRAL_RDR”
PRODUCT_CREATION_TIME	TIME	26	2011-10-25T23:17:20.029
START_TIME	TIME	26	9999-01-01T01:01:01
STOP_TIME	TIME	26	9999-01-01T01:01:01
SPACECRAFT_CLOCK_START_COUNT	CHARACTER	19	“1/0089570568:924000”
SPACECRAFT_CLOCK_STOP_COUNT	CHARACTER	19	“1/0089570568:990000”
PRODUCT_VERSION_ID	ASCII_INTEGER	3	1
LINES	ASCII_INTEGER	4	6400
LINE_SAMPLES	ASCII_INTEGER	4	9216
BANDS	ASCII_INTEGER	2	2
CENTER_LATITUDE	ASCII_REAL	10	0.0000000 <DEGREE>
CENTER_LONGITUDE	ASCII_REAL	10	0.000000 <DEGREE>
MAP_RESOLUTION	ASCII_INTEGER	4	256 <PIXEL/DEGREE>
MAXIMUM_LATITUDE	ASCII_REAL	10	25.0000000 <DEGREE>
MINIMUM_LATITUDE	ASCII_REAL	10	0.0000000 <DEGREE>
WESTERNMOST_LONGITUDE	ASCII_REAL	10	0.0000000 <DEGREE>
EASTERNMOST_LONGITUDE	ASCII_REAL	10	36.0000000 <DEGREE>
LOWER_RIGHT_LATITUDE	ASCII_REAL	7	-99.999 <DEGREE>
LOWER_RIGHT_LONGITUDE	ASCII_REAL	8	-999.999 <DEGREE>
LOWER_LEFT_LATITUDE	ASCII_REAL	7	-99.999 <DEGREE>
LOWER_LEFT_LONGITUDE	ASCII_REAL	8	-999.999 <DEGREE>
UPPER_RIGHT_LATITUDE	ASCII_REAL	7	-99.999 <DEGREE>
UPPER_RIGHT_LONGITUDE	ASCII_REAL	8	-999.999 <DEGREE>
UPPER_LEFT_LATITUDE	ASCII_REAL	7	-99.999 <DEGREE>
UPPPER_LEFT_LONGITUDE	ASCII_REAL	8	-999.999 <DEGREE>

Table 3-4: BDR/MDR Index Table Contents.

3.3.3 Catalog Directory

The files in the Catalog Directory (Table 3-5) provide a top-level understanding of the mission, spacecraft, instruments, and data set. The files in this directory become part of the PDS Catalog

to provide background information for the user searching for data. Their format and contents are further specified in the PDS Standards Reference (Applicable Document 3). The following files are found in the Catalog Directory.

File Name	Required?	File Contents
CATINFO.TXT	Yes	Identifies and describes the function of each file in the catalog directory.
MDIS_NNN_DS.CAT	Yes	Data set description, where NNN is replaced by CDR, DDR, BDR, or MDR.
INSTHOST.CAT	Yes	Description of the MESSENGER spacecraft for the PDS catalog.
MDIS.CAT	Yes	Description of the MDIS instrument for the PDS catalog.
BDR_MAP.CAT	Yes	MDIS data set map projection information for equatorial region (BDR data sets only).
BDR_POLAR_MAP.CAT	Yes	MDIS data set map projection information for polar region (BDR data sets only).
MDR_MAP.CAT	Yes	MDIS data set map projection information for equatorial region (MDR data sets only).
MDR_POLAR_MAP.CAT	Yes	MDIS data set map projection information for polar region (MDR data sets only).
MISSION.CAT	Yes	Description of the MESSENGER mission for the PDS catalog.
PERSON.CAT	Yes	List of personnel associated with the MESSENGER PDS delivery for the PDS catalog.
REF.CAT	Yes	Catalog objects' citation list for the PDS catalog.

Table 3-5: Catalog Directory Contents.

3.3.4 Document Directory

The Document Directory (Table 3-6) contains documentation to help the user understand and use the archive data. The following files are contained in the Document Directory.

File Name	Required?	File Contents
DOCINFO.TXT	Yes	Identifies and describes the function of each file in the document directory.
MDIS_CDR_RDRSIS.PDF	Yes	Software Interface Specification for the CDR/RDR data products as an Adobe PDF document.
MDIS_CDR_RDRSIS.HTM	Yes	Software Interface Specification for the CDR/RDR data products as an HTML document.
MDIS_CDR_RDRSIS.LBL	Yes	PDS label for MDIS_CDR_RDRSIS.PDF and MDIS_CDR_RDRSIS.HTM.
PDSDD.FUL	Yes	The PDS Data Dictionary that includes definitions of all keywords used in MESSENGER data labels, including MESSENGER-specific keywords (i.e. the MESSENGER Local Data Dictionary). This is a text file that is human-readable and

		also usable as input to PDS label validation software.
PDSDD.IDX	Yes	An index to PDSDD.FUL, used by PDS validation software.
PDSDD.LBL	Yes	A PDS detached label that describes the above two PDSDD files.

Table 3-6: Document Directory Contents.

3.3.5 CDR Directory (CDR Volumes Only)

3.3.5.1 CDR File Naming

The file names developed for this PDS archive are restricted to a maximum 27-character base name and 3 character extension name with a period separating the file and extension names. Also known as the "27.3" format, this is compliant with the ISO 9660 Level 2 specification (maximum of 31 characters), which is required by PDS. The MDIS CDR products have a "18.3" format and thus remain within the PDS specification parameters. Below is the detailed naming convention for this dataset.

Format: "pcnnnnnnnnnnf_tt_v"

p = product type = C calibrated
c = camera (W WAC or N NAC)
nnnnnnnnnn = Mission Elapsed Time (MET) counter taken from the image header (and same as original compressed filename from SSR). NOTE: this is a spacecraft clock seconds counter, and the value in the filename corresponds to the LAST second of the exposure.
f = Filter wheel position (A, B, C, D, E, F, G, H, I, J, K, L, U) for the WAC (see Table 3-7 below). It is M for the NAC, which has no filter wheel. It will be U if the position is unknown.
tt = data type (RA radiance, IF I/F, or DE derived products)
v = version number

Filter Number	Filter Filename Letter	Wavelength (Flight) (nm)	Width (Flight) (nm)
1	A	700.6	4.4
2	B	700.0	600.0
3	C	481.8	9.6
4	D	560.1	5.2
5	E	630.2	4.9
6	F	419.8	44.5
7	G	750.8	4.3
8	H	950.8	5.9
9	I	1000.4	14.2
10	J	900.0	4.4
11	K	1022.3	43.6
12	L	830.6	4.4

Table 3-7: Filter numbers and their bandpasses.

The following is an example file name with a description of the individual components:

CW0014032676F_RA_0.IMG

For this image:
- Product type = CDR (**C**)
- Camera = WAC (**W**)
- MET = **0014032676**
- WAC filter wheel position = 6 (419nm/44 nm FWHM) **(F**)
- Data type = radiance (**RA**)
- Version number = 0

3.3.5.2 CDR Structure and Organization

A Calibrated Data Record (CDR) is a single image that has been corrected for geometric and optical effects. The MDIS CDR data set consists of files that parallel Experiment Data Records (EDRs) in their format and directory structure. Each attached label points to a single-frame calibrated image in units of radiance or I/F as 32-bit PC_REAL.

x, y dimensions = 1024/(MESS:FPU_BIN * MESS:PIXELBIN)

See section 2.5.2.1 for a description of how the CDR products are generated.

3.3.5.3 CDR Label Description

The label area of the data file conforms to PDS version 3.7 standards (Applicable Document 3). The purpose of the PDS label is to describe the measurement data and provide engineering and observation parameters. A sample CDR label can be found in Appendix C. Table 3-8 below lists MDIS-specific values for CDR label keywords. See Appendix B for keyword descriptions.

Keyword	Valid Values
INSTRUMENT_NAME	“MERCURY DUAL IMAGING SYSTEM WIDE ANGLE CAMERA” “MERCURY DUAL IMAGING SYSTEM NARROW ANGLE CAMERA”
INSTRUMENT_ID	“MDIS-WAC” “MDIS-NAC”
FILTER_NAME	"430 BP 40" "480 BP 10" "560 BP 5" "630 BP 5" "700 BP 5" "750 BP 5" "830 BP 5" "900 BP 5" "950 BP 7" "1000 BP 15" "1020 BP 40" “N/A”
FILTER_NUMBER	Integer 1 - 12 “N/A”
MESS:MET_EXP	Time in seconds
MESS:ATT_CLOCK_CO	Time in seconds

Keyword	Valid Values
UNT	
MESS:ATT_Q1	-1.0 to 1.0
MESS:ATT_Q2	-1.0 to 1.0
MESS:ATT_Q3	-1.0 to 1.0
MESS:ATT_Q4	-1.0 to 1.0
MESS:ATT_FLAG	Integer 0 to 7
MESS:PIV_GOAL	Integer -32768 to 32768
MESS:PIV_POS	Integer -32768 to 32768
MESS:PIV_READ	Integer 0 to 65535
MESS:PIV_CAL	Integer -32768 to 32768
MESS:FW_GOAL	Integer 0 to 65535
MESS:FW_POS	Integer 0 to 65535
MESS:FW_READ	Integer 0 to 65535
MESS:CCD_TEMP	Integer 0 to 4095
MESS:CAM_T1	Integer 0 to 1023
MESS:CAM_T2	Integer 0 to 1023
MESS:EXPOSURE	Time in seconds
MESS:DPU_ID	Integer 0 or 1
MESS:IMAGER	Integer 0 or 1
MESS:SOURCE	Integer 0, 1, or 2
MESS:FPU_BIN	Integer 0 or 1
MESS:COMP12_8	Integer 0 or 1
MESS:COMP_ALG	Integer 0 to 7
MESS:COMP_FST	Integer 0 or 1
MESS:TIME_PLS	Integer 0 to 3
MESS:LATCH_UP	Integer 0 or 1
MESS:EXP_MODE	Integer 0 or 1
MESS:PIV_STAT	Integer 0 to 3
MESS:PIV_MPEN	Integer 0 or 1
MESS:PIV_PV	Integer 0 or 1
MESS:PIV_RV	Integer 0 or 1
MESS:FW_PV	Integer 0 or 1
MESS:FW_RV	Integer 0 or 1
MESS:AEX_STAT	Integer 0 to 4095
MESS:AEX_STHR	Integer 0 to 65535
MESS:AEX_TGTB	Integer 0 to 4095
MESS:AEX_BACB	Integer 0 to 4095
MESS:AEX_MAXE	Integer 0 to 989
MESS:AEX_MINE	Integer 0 to 989
MESS:DLNKPRIO	Integer 0 to 9
MESS:WVLRATIO	Integer 0 to 32
MESS:PIXELBIN	Integer 0, 2, 4, or 8
MESS:SUBFRAME	Integer 0 to 5
MESS:SUBF_X1	Integer 0 to 1023
MESS:SUBF_Y1	Integer 0 to 1023
MESS:SUBF_DX1	Integer 0 to 1024
MESS:SUBF_DY1	Integer 0 to 1024
MESS:SUBF_X2	Integer 0 to 1023
MESS:SUBF_Y2	Integer 0 to 1023
MESS:SUBF_DX2	Integer 0 to 1024
MESS:SUBF_DY2	Integer 0 to 1024
MESS:SUBF_X3	Integer 0 to 1023

Keyword	Valid Values
MESS:SUBF_Y3	Integer 0 to 1023
MESS:SUBF_DX3	Integer 0 to 1024
MESS:SUBF_DY3	Integer 0 to 1024
MESS:SUBF_X4	Integer 0 to 1023
MESS:SUBF_Y4	Integer 0 to 1023
MESS:SUBF_DX4	Integer 0 to 1024
MESS:SUBF_DY4	Integer 0 to 1024
MESS:SUBF_X5	Integer 0 to 1023
MESS:SUBF_Y5	Integer 0 to 1023
MESS:SUBF_DX5	Integer 0 to 1024
MESS:SUBF_DY5	Integer 0 to 1024
MESS:CRITOPNV	Integer 0 or 1
MESS:JAILBARS	Integer 0 or 1
MESS:JB_X0	Integer 0 to 1023
MESS:JB_X1	Integer 0 to 1023
MESS:JB_SPACE	Integer 0 to 1023

Table 3-8. MDIS-specific values for CDR label keywords.

3.3.6 DDR Directory (DDR Volumes Only)

3.3.6.1 DDR File Naming

The file names developed for this PDS archive are restricted to a maximum 27-character base name and 3 character extension name with a period separating the file and extension names. Also known as the "27.3" format, this is compliant with the ISO 9660 Level 2 specification (maximum of 31 characters), which is required by PDS. The MDIS DDR products have a "18.3" format and thus remain within the PDS specification parameters. Below is the detailed naming convention for this dataset.

Format: "pcnnnnnnnnnnf_tt_v"

p = product type = D derived
c = camera (W WAC or N NAC)
nnnnnnnnnn = Mission Elapsed Time (MET) counter taken from the image header (and same as original compressed filename from SSR). NOTE: this a spacecraft clock seconds counter, and the value in the filename corresponds to the LAST second of the exposure.
f = Filter wheel position (A, B, C, D, E, F, G, H, I, J, K, L, U) for the WAC (see Table 3-7 above). It is M for the NAC, which has no filter wheel. It will be U if the position is unknown.
tt = data type (RA radiance, IF I/F, or DE derived products)
v = version number

The following is an example file name with a description of the individual components:

DW0089570568F_DE_0.IMG

For this image:

- Product type = DDR (**D**)

- Camera = WAC (**W**)
- MET = **0089570568**
- WAC filter wheel position = 6 (419nm/44 nm FWHM) **(F**)
- Data type = derived (**DE**)
- Version number = 0

3.3.6.2 DDR Structure and Organization

The Derived Data Record (DDR) data set consists of files that parallel CDRs in their directory structure. Each DDR has 5 layers of data containing geometric information (latitude, longitude, incidence angle, emission angle, phase angle) as 32-bit PC_REAL. This information is derived from pixel spatial coordinates and associated SPICE files. A DDR label is attached and points to a single multiband image in the DDR.

x, y dimensions = 1024/(MESS:FPU_BIN * MESS:PIXELBIN)

See section 2.5.2.2 for a description of how the DDR products are generated.

3.3.6.3 DDR Label Description

The label conforms to PDS version 3.7 standards (Applicable Document 3). The purpose of the PDS label is to describe the measurement data and provide engineering and observation parameters. A sample DDR label can be found in Appendix D. Table 3-9 below lists MDIS-specific values for DDR label keywords. See Appendix B for keyword descriptions.

Keyword	Valid Values
INSTRUMENT_NAME	“MERCURY DUAL IMAGING SYSTEM WIDE ANGLE CAMERA” “MERCURY DUAL IMAGING SYSTEM NARROW ANGLE CAMERA
INSTRUMENT_ID	“MDIS-WAC” “MDIS-NAC”
FILTER_NAME	"430 BP 40" "480 BP 10" "560 BP 5" "630 BP 5" "700 BP 5" "750 BP 5" "830 BP 5" "900 BP 5" "950 BP 7" "1000 BP 15" "1020 BP 40" “N/A”
FILTER_NUMBER	Integers 1 - 12 “N/A”
MESS:MET_EXP	Time in seconds
MESS:ATT_CLOCK_COUNT	Time in seconds
MESS:ATT_Q1	-1.0 to 1.0
MESS:ATT_Q2	-1.0 to 1.0
MESS:ATT_Q3	-1.0 to 1.0

Keyword	Valid Values
MESS:ATT_Q4	-1.0 to 1.0
MESS:ATT_FLAG	Integer 0 to 7
MESS:PIV_GOAL	Integer -32768 to 32768
MESS:PIV_POS	Integer -32768 to 32768
MESS:PIV_READ	Integer 0 to 65535
MESS:PIV_CAL	Integer -32768 to 32768
MESS:FW_GOAL	Integer 0 to 65535
MESS:FW_POS	Integer 0 to 65535
MESS:FW_READ	Integer 0 to 65535
MESS:CCD_TEMP	Integer 0 to 4095
MESS:CAM_T1	Integer 0 to 1023
MESS:CAM_T2	Integer 0 to 1023
MESS:EXPOSURE	Time in seconds
MESS:DPU_ID	Integer 0 or 1
MESS:IMAGER	Integer 0 or 1
MESS:SOURCE	Integer 0, 1, or 2
MESS:FPU_BIN	Integer 0 or 1
MESS:COMP12_8	Integer 0 or 1
MESS:COMP_ALG	Integer 0 to 7
MESS:COMP_FST	Integer 0 or 1
MESS:TIME_PLS	Integer 0 to 3
MESS:LATCH_UP	Integer 0 or 1
MESS:EXP_MODE	Integer 0 or 1
MESS:PIV_STAT	Integer 0 to 3
MESS:PIV_MPEN	Integer 0 or 1
MESS:PIV_PV	Integer 0 or 1
MESS:PIV_RV	Integer 0 or 1
MESS:FW_PV	Integer 0 or 1
MESS:FW_RV	Integer 0 or 1
MESS:AEX_STAT	Integer 0 to 4095
MESS:AEX_STHR	Integer 0 to 65535
MESS:AEX_TGTB	Integer 0 to 4095
MESS:AEX_BACB	Integer 0 to 4095
MESS:AEX_MAXE	Integer 0 to 989
MESS:AEX_MINE	Integer 0 to 989
MESS:DLNKPRIO	Integer 0 to 9
MESS:WVLRATIO	Integer 0 to 32
MESS:PIXELBIN	Integer 0, 2, 4, or 8
MESS:SUBFRAME	Integer 0 to 5
MESS:SUBF_X1	Integer 0 to 1023
MESS:SUBF_Y1	Integer 0 to 1023
MESS:SUBF_DX1	Integer 0 to 1024
MESS:SUBF_DY1	Integer 0 to 1024
MESS:SUBF_X2	Integer 0 to 1023
MESS:SUBF_Y2	Integer 0 to 1023
MESS:SUBF_DX2	Integer 0 to 1024
MESS:SUBF_DY2	Integer 0 to 1024
MESS:SUBF_X3	Integer 0 to 1023
MESS:SUBF_Y3	Integer 0 to 1023
MESS:SUBF_DX3	Integer 0 to 1024
MESS:SUBF_DY3	Integer 0 to 1024
MESS:SUBF_X4	Integer 0 to 1023

Keyword	Valid Values
MESS:SUBF_Y4	Integer 0 to 1023
MESS:SUBF_DX4	Integer 0 to 1024
MESS:SUBF_DY4	Integer 0 to 1024
MESS:SUBF_X5	Integer 0 to 1023
MESS:SUBF_Y5	Integer 0 to 1023
MESS:SUBF_DX5	Integer 0 to 1024
MESS:SUBF_DY5	Integer 0 to 1024
MESS:CRITOPNV	Integer 0 or 1
MESS:JAILBARS	Integer 0 or 1
MESS:JB_X0	Integer 0 to 1023
MESS:JB_X1	Integer 0 to 1023
MESS:JB_SPACE	Integer 0 to 1023
BAND_NAME	"Latitude, planetocentric, deg N" "Longitude, planetocentric, deg E" "Incidence angle at equipotential surface, deg" "Emission angle at equipotential surface, deg" "Phase angle at equipotential surface, deg"

Table 3-9. MDIS-specific values for DDR label keywords.

3.3.7 BDR Directory (BDR Volumes Only)

3.3.7.1 BDR File Naming

The file names developed for this PDS archive are restricted to a maximum 27-character base name and 3 character extension name with a period separating the file and extension names. Also known as the "27.3" format, this is compliant with the ISO 9660 Level 2 specification (maximum of 31 characters), which is required by PDS. The MDIS BDR products have a "19.3" format and thus remain within the PDS specification parameters. Below is the detailed naming convention for this dataset.

Map tiles will be named based on the latitudes and longitudes they span. The same scheme will be used at the quadrant and quadrangle level.

Format: "cccss_yydxxx_rrrr_v"

ccc = product type = BDR
ss = subtype of image product (IF I/F, AL photometrically corrected I/F, or DE derived products)
yy = latitude of upper left corner
d = N or S for north or south latitude
xxx = east longitude of upper left corner
rrrr = resolution in pixels/degree
v = version number

The following is an example file name with a description of the individual components:

BDRIF_25N000_0256_0.IMG

For this image:

- Product type = BDR (**BDR**)
- Subtype = I/F (**IF**)
- Upper left corner latitude = 25 degrees N (**25N**)
- Upper left corner east longitude = 0 degrees (**000**)
- Resolution = 256 pixels/degree (**0256**)
- Version number = 0

3.3.7.2 BDR Structure and Organization

The BDR directory, present in the BDR archive volume, contains MDIS Map Projected Basemap Reduced Data Records (BDRs). The BDRs are organized into directories based on the Mercury Chart containing the BDR. Latitude and longitude limits of Mercury Charts are given in Table 3-10.

Quadrangle	Latitude (degrees)	Longitude (degrees east)
H-1 Borealis	65 to 90	0 to 360
H-2 Victoria	25 to 70	270 to 360
H-3 Shakespeare	25 to 70	180 to 270
H-4 Liguria	25 to 70	90 to 180
H-5 Apollonia	25 to 70	0 to 90
H-6 Kuiper	-25 to 25	288 to 360
H-7 Beethoven	-25 to 25	216 to 288
H-8 Tolstoj	-25 to 25	144 to 216
H-9 Solitudo Criophori	-25 to 25	72 to 144
H-10 Pieria	-25 to 25	0 to 72
H-11 Discovery	-70 to -25	270 to 360
H-12 Michelangelo	-70 to -25	180 to 270
H-13 Solitudo Persephones	-70 to -25	90 to 180
H-14 Cyllene	-70 to -25	0 to 90
H-15 Bach	-90 to -65	0 to 360

Table 3-10. Latitude and longitude limits of Mercury Charts.

A BDR:

- Consists of map-projected CDRs mosaicked into a monochrome map tile.
- Contains image data in I/F (**IF**) at a resolution of 256 pixels per degree (~160 meters/pixel at the equator).
- Represents one latitude-longitude bin in a global map.
- Is composed of 2 bands corresponding to the WAC filter 7 (750 BP 5) and NAC detectors.
- Has an associated separate file of derived products (**DE**) containing 5 backplanes for each band: (a) incidence angle, (b) emission angle, (c) phase angle, (d) mission elapsed time (MET), and (e) slant range.

Having photometric and MET data in a separate file allows photometrically corrected I/F to be updated as photometric function changes, without updating other files. Versions increment on

reprocessing or addition of new data. Polar tiles are in polar stereographic projections, other tiles in equirectangular projection.

See section 2.5.2.3 for a description of how the BDR products are generated.

3.3.7.3 BDR Map Projection Standards

MDIS nadir-pointed basemap imaging of Mercury is mosaicked into 60 non-overlapping, 256 pixel/degree tiles. Each file corresponds to the NE, NW, SE, or SW quadrant of one of the pre-existing Mercury charts. The adopted projection convention is planetocentric, positive east, using the prime meridian and pole of rotation described in Davies et al. [1976, Applicable Document 12]. The projection varies with latitude, using EQUIRECTANGULAR for tiles centered equatorward of 65 degrees latitude, and POLAR STEREOGRAPHIC centered poleward of 65 degrees latitude.

3.3.7.3.1 Equirectangular Projections

For the latitude band projected equirectangularly, the CENTER_LATITUDE of projection is the equatorward boundary of each band to minimize 'distortion.' The transformation from latitude and longitude to line and sample is given by the following equations:

LINE = int(LINE_PROJECTION_OFFSET - lat*MAP_RESOLUTION)

SAMPLE = int(SAMPLE_PROJECTION_OFFSET - lon*MAP_RESOLUTION)

where lat = latitude and lon = longitude.

Note that integral values of line and sample correspond to the center of a pixel. Lat and lon are the latitude and longitude of a given location on the surface, east positive.

MAP_RESOLUTION = the map resolution in pixels per degree, 256 pixels/degree for a BDR.

LINE_PROJECTION_OFFSET = the line number minus the line on which the map projection origin occurs. For an EQUIRECTANGULAR map projection, origin is the equatorward edge of the map tile. The value of LINE_PROJECTION_OFFSET is positive for images starting north of the equator and is negative for images starting south of the equator.

SAMPLE_PROJECTION_OFFSET = the nearest sample number to the left of the projection longitude. For an EQUIRECTANGULAR map projection, the value of SAMPLE_PROJECTION_OFFSET is positive for images starting to the west of the projection longitude and is negative for images starting to the east of the projection longitude.

MAP_RESOLUTION is measured in pixels/degree.

MAP_SCALE is measured in km/pixel and is an average.

There are four PDS parameters that specify the latitude and longitude boundaries of an image. MAXIMUM_LATITUDE and MINIMUM_LATITUDE specify the latitude boundaries of the image, and EASTERNMOST_LONGITUDE and WESTERNMOST_LONGITUDE specify the longitudinal boundaries of the map.

Definitions of other mapping parameters can be found in the PDS Data Dictionary.

3.3.7.3.2 Polar Stereographic Projections

For the latitude bands projected polar stereographically, projection is centered on the north or south pole. Lines of longitude extend radially from the pole and parallels of latitude are concentric circles around the center. In the north, longitude 0 extends straight down from the center and Longitude 90 East extends to the right. In south, longitude 0 extends straight up from the center, and longitude 90 East extends to the right. Thus in any given tile, north is at a variable orientation in LINE-SAMPLE space. The transformation from line and sample coordinates to planetocentric latitude and longitude is given by these equations.

x = (SAMPLE - LINE_PROJECTION_OFFSET - 0.5)/MAP_RESOLUTION
y = (LINE - SAMPLE_PROJECTION_OFFSET - 0.5)/MAP_RESOLUTION
r = sqrt(x^2 + y^2)
lon = atan2(x,y) * 180/pi
lat = 90 - 2*atan(r*pi/360) * 180/pi (northern hemisphere)
lat = -90 + 2*atan(r*pi/360) * 180/pi (southern hemisphere)
where lat = latitude in degrees and lon = longitude in degrees.

MAP_RESOLUTION = the map resolution in pixels per degree, 256 pixels/degree for a BDR.

LINE_PROJECTION_OFFSET = the line number minus the line on which the map projection origin occurs. For a POLAR STEREOGRAPHIC projection the direction and magnitude of offset will depend on longitude of the map tile.

SAMPLE_PROJECTION_OFFSET = the nearest sample number to the left of the projection longitude. For a POLAR STEREOGRAPHIC projection the direction and magnitude of offset will depend on longitude of the map tile.

MAP_RESOLUTION is measured in pixels/degree.

MAP_SCALE is measured in km/pixel and in the north-south direction.

There are four PDS parameters that specify the latitude and longitude boundaries of an image. MAXIMUM_LATITUDE and MINIMUM_LATITUDE specify the latitude boundaries of the image, and EASTERNMOST_LONGITUDE and WESTERNMOST_LONGITUDE specify the longitudinal boundaries of the map.

Definitions of other mapping parameters can be found in the PDS Data Dictionary.

3.3.7.4 BDR Label Description

The detached label conforms to PDS version 3.7 standards (Applicable Document 3). The purpose of the PDS label is to describe the measurement data and provide engineering and observation parameters. Sample BDR labels can be found in Appendix E. Table 3-11 below lists MDIS-specific values for BDR label keywords. See Appendix B for keyword descriptions.

Keyword	Valid Values
INSTRUMENT_ID	“MDIS-WAC” “MDIS-NAC”
PRODUCT_TYPE	MAP_PROJECTED_BASEMAP_RDR
UNIT	“I over F” “Normalized I over F”
BAND_NAME	“NAC” “WAC, filter 7, 750 BP 5” “NAC, incidence angle, degrees” "NAC, emission angle, degrees" "NAC, phase angle, degrees" "NAC, mission-elapsed time, sec" “NAC, slant range, kilometers” "WAC, filter 7, incidence angle, degrees" "WAC, filter 7, emission angle, degrees" "WAC, filter 7, phase angle, degrees" "WAC, filter 7, mission-elapsed time, sec" "WAC, filter 7, slant range, kilometers"

Table 3-11. MDIS-specific values for BDR label keywords.

3.3.8 MDR Directory (MDR Volumes Only)

3.3.8.1 MDR File Naming

The file names developed for this PDS archive are restricted to a maximum 27-character base name and 3 character extension name with a period separating the file and extension names. Also known as the “27.3” format, this is compliant with the ISO 9660 Level 2 specification (maximum of 31 characters), which is required by PDS. The MDIS MDR products have a “19.3” format and thus remain within the PDS specification parameters. Below is the detailed naming convention for this dataset.

Map tiles will be named based on the latitudes and longitudes they span. The same scheme will be used at the quadrant and quadrangle level.

Format: "cccss_yydxxx_rrrr_v"

ccc = product type = MDR
ss = subtype of image product (IF I/F, AL photometrically corrected I/F, or DE derived products)
yy = latitude of upper left corner
d = N or S for north or south latitude
xxx = east longitude of upper left corner
rrrr = resolution in pixels/degree
v = version number

The following is an example file name with a description of the individual components:

MDRIF_25N000_0064_0.IMG

For this image:
- Product type = MDR (**MDR**)

- Subtype = I/F (**IF**)
- Upper left corner latitude = 25 degrees N (**25N**)
- Upper left corner east longitude = 0 degrees (**000**)
- Resolution = 64 pixels/degree (**0064**)
- Version number = 0

3.3.8.2 MDR Structure and Organization

The MDR directory, present in the MDR archive volume, contains MDIS Map Projected Multispectral Reduced Data Records (MDRs). The MDRs are organized into directories based on the Mercury Chart containing the MDR. Latitude and longitude limits of Mercury Charts are given in Table 3-10.

A MDR:

- Consists of map-projected CDRs mosaicked into a multispectral map tile.
- Contains image data in I/F (**IF**) at a resolution of 64 pixels per degree (~1 km/pixel at the equator).
- Represents one latitude-longitude bin in a global color map.
- Is composed of 11 bands corresponding to the 11WAC filters.
- Has an associated separate file of derived products (**DE**) containing 5 backplanes for each band: (a) incidence angle, (b) emission angle, (c) phase angle, (d) mission elapsed time (MET), and (e) slant range.

Having photometric and MET data in a separate file allows normalized I/F to be updated as photometric function changes, without updating other files. Versions increment on reprocessing or addition of new data. Polar tiles are in polar stereographic projections, other tiles in equirectangular projection.

See section 2.5.2.4 for a description of how the MDR products are generated.

3.3.8.3 MDR Map Projection Standards

MDIS multispectal imaging of Mercury is mosaicked into 60 partially overlapping, 64 pixel/degree tiles. Each file corresponds to the NE, NW, SE, or SW quadrant of one of the pre-existing Mercury charts. The adopted projection convention is planetocentric, positive east, using the prime meridian and pole of rotation described in Davies et al. [1976, Applicable Document 12]. The projection varies with latitude, using EQUIRECTANGULAR for tiles centered equatorward of 65 degrees latitude, and POLAR STEREOGRAPHIC centered poleward of 65 degrees latitude.

3.3.8.3.1 Equirectangular Projections

For the latitude band projected equirectangularly, the CENTER_LATITUDE of projection is the equatorward boundary of each band to minimize 'distortion.' The transformation from latitude and longitude to line and sample is given by the following equations:

LINE = int(LINE_PROJECTION_OFFSET - lat*MAP_RESOLUTION)

SAMPLE = int(SAMPLE_PROJECTION_OFFSET - lon*MAP_RESOLUTION)
where lat = latitude and lon = longitude.

Note that integral values of line and sample correspond to the center of a pixel. Lat and lon are the latitude and longitude of a given location on the surface, east positive.

MAP_RESOLUTION= the map resolution in pixels per degree, 64 pixels/degree for a MDR.

LINE_PROJECTION_OFFSET is the line number minus the line on which the map projection origin occurs. For an EQUIRECTANGULAR map projection, origin is the equatorward edge of the map tile. The value of LINE_PROJECTION_OFFSET is positive for images starting north of the equator and is negative for images starting south of the equator.

SAMPLE_PROJECTION_OFFSET is the nearest sample number to the left of the projection longitude. For an EQUIRECTANGULAR map projection, the value of SAMPLE_PROJECTION_OFFSET is positive for images starting to the west of the projection longitude and is negative for images starting to the east of the projection longitude.

MAP_RESOLUTION is measured in pixels/degree.

MAP_SCALE is measured in km/pixel and in the north-south direction.

There are four PDS parameters that specify the latitude and longitude boundaries of an image. MAXIMUM_LATITUDE and MINIMUM_LATITUDE specify the latitude boundaries of the image, and EASTERNMOST_LONGITUDE and WESTERNMOST_LONGITUDE specify the longitudinal boundaries of the map.

Definitions of other mapping parameters can be found in the PDS Data Dictionary.

3.3.8.3.2 Polar Stereographic Projections

For the latitude bands projected polar stereographically, projection is centered on the north or south pole. Lines of longitude extend radially from the pole and parallels of latitude are concentric circles around the center. In the north, longitude 0 extends straight down from the center and Longitude 90 East extends to the right. In the south, longitude 0 extends straight up from the center, and longitude 90 East extends to the right. Thus in any given tile, north is at a variable orientation in LINE-SAMPLE space. The transformation from line and sample coordinates to planetocentric latitude and longitude is given by these equations.

x = (SAMPLE - LINE_PROJECTION_OFFSET - 0.5)/MAP_RESOLUTION
y = (LINE - SAMPLE_PROJECTION_OFFSET - 0.5)/MAP_RESOLUTION
r = sqrt(x^2 + y^2)
lon = atan2(x,y) * 180/pi
lat = 90 - 2*atan(r*pi/360) * 180/pi (northern hemisphere)
lat = -90 + 2*atan(r*pi/360) * 180/pi (southern hemisphere)

where lat = latitude in degrees and lon = longitude in degrees.

MAP_RESOLUTION= the map resolution in pixels per degree, 64 pixels/degree for a MDR.

LINE_PROJECTION_OFFSET is the line number minus the line on which the map projection origin occurs. For a POLAR STEREOGRAPHIC projection the direction and magnitude of offset will depend on longitude of the map tile.

SAMPLE_PROJECTION_OFFSET is the nearest sample number to the left of the projection longitude. For a POLAR STEREOGRAPHIC projection the direction and magnitude of offset will depend on longitude of the map tile.

MAP_RESOLUTION is measured in pixels/degree.

MAP_SCALE is measured in km/pixel and is an average.

There are four PDS parameters that specify the latitude and longitude boundaries of an image. MAXIMUM_LATITUDE and MINIMUM_LATITUDE specify the latitude boundaries of the image, and EASTERNMOST_LONGITUDE and WESTERNMOST_LONGITUDE specify the longitudinal boundaries of the map.

Definitions of other mapping parameters can be found in the PDS Data Dictionary.

3.3.8.4 MDR Label Description

The detached label conforms to PDS version 3.7 standards (Applicable Document 3). The purpose of the PDS label is to describe the measurement data and provide engineering and observation parameters. Sample MDR labels can be found in Appendix F. Table 3-12 below lists MDIS-specific values for MDR label keywords. See Appendix B for keyword descriptions.

Keyword	**Valid Values**
INSTRUMENT_ID	“MDIS-WAC”
PRODUCT_TYPE	MAP_PROJECTED_MULTISPECTRAL_RDR
UNIT	“I over F” “Normalized I over F”
BAND_NAME	"WAC, filter 1, 700 BP 5" "WAC, filter 3, 480 BP 10" "WAC, filter 4, 560 BP 5" "WAC, filter 5, 630 BP 5" "WAC, filter 6, 430 BP 40" "WAC, filter 7, 750 BP 5" "WAC, filter 8, 950 BP 7" "WAC, filter 9, 1000 BP 15" "WAC, filter 10, 900 BP 5" "WAC, filter 11, 1020 BP 40" "WAC, filter 12, 830 BP 5" "WAC, filter 1, incidence angle, degrees" "WAC, filter 1, emission angle, degrees"

Keyword	Valid Values
	"WAC, filter 1, phase angle, degrees" "WAC, filter 1, mission-elapsed time, seconds" "WAC, filter 1, slant range, kilometers" "WAC, filter 3, incidence angle, degrees" "WAC, filter 3, emission angle, degrees" "WAC, filter 3, phase angle, degrees" "WAC, filter 3, mission-elapsed time, seconds" "WAC, filter 3, slant range, kilometers" "WAC, filter 4, incidence angle, degrees" "WAC, filter 4, emission angle, degrees" "WAC, filter 4, phase angle, degrees" "WAC, filter 4, mission-elapsed time, seconds" "WAC, filter 4, slant range, kilometers" "WAC, filter 5, incidence angle, degrees" "WAC, filter 5, emission angle, degrees" "WAC, filter 5, phase angle, degrees" "WAC, filter 5, mission-elapsed time, seconds" "WAC, filter 5, slant range, kilometers" "WAC, filter 6, incidence angle, degrees" "WAC, filter 6, emission angle, degrees" "WAC, filter 6, phase angle, degrees" "WAC, filter 6, mission-elapsed time, seconds" “WAC, filter 6, slant range, kilometers" "WAC, filter 7, incidence angle, degrees" "WAC, filter 7, emission angle, degrees" "WAC, filter 7, phase angle, degrees" "WAC, filter 7, mission-elapsed time, seconds" "WAC, filter 7, slant range, kilometers" "WAC, filter 8, incidence angle, degrees" "WAC, filter 8, emission angle, degrees" "WAC, filter 8, phase angle, degrees" "WAC, filter 8, mission-elapsed time, seconds" "WAC, filter 8, slant range, kilometers" "WAC, filter 9, incidence angle, degrees" "WAC, filter 9, emission angle, degrees" "WAC, filter 9, phase angle, degrees" "WAC, filter 9, mission-elapsed time, seconds" "WAC, filter 9, slant range, kilometers" "WAC, filter 10, incidence angle, degrees" "WAC, filter 10, emission angle, degrees" "WAC, filter 10, phase angle, degrees" "WAC, filter 10, mission-elapsed time, seconds" "WAC, filter 10, slant range, kilometers" "WAC, filter 11, incidence angle, degrees" "WAC, filter 11, emission angle, degrees" "WAC, filter 11, phase angle, degrees" "WAC, filter 11, mission-elapsed time, seconds" "WAC, filter 11, slant range, kilometers" "WAC, filter 12, incidence angle, degrees" "WAC, filter 12, emission angle, degrees" "WAC, filter 12, phase angle, degrees" "WAC, filter 12, mission-elapsed time, seconds" "WAC, filter 12, slant range, kilometers"

Table 3-12. MDIS-specific values for MDR label keywords.

3.3.9 Calib Directory

The Calib directory (Table 3-13) contains the calibration files used in the processing of the raw data to create the CDRs or needed to use the data products on the volume.

File Name		Req.?	File Contents
CALINFO.TXT		Yes	Describes the contents of this directory.
LUT_INVERT/		No	This directory contains the inverse lookup table required for inverting 8-bit images into their original 12-bit format.
	MDISLUTINV_0.TAB	No	This file contains 8-bit values, and the 12-bit values to which they correspond. There is one set of 12-bit values for each of the eight available lookup tables in the instrument.
	MDISLUTINV_0.LBL	No	The label that describes the preceding file.
DARK_MODEL/		No	This directory contains tables of coefficients needed to model the dark level in the NAC or WAC, with on-chip pixel binning turned on or not.
	MDIScam_bining_DARKMODEL_v.TAB	No	**cam** = camera, NAC or WAC **bining** = binning, NOTBIN or BINNED **v** = version number, 0-9, a-z
	MDIScam_bining_DARKMODEL_v.LBL	No	Detached labels describing the tables.
FLAT/		No	This directory contains flat-field images which correct for response variations from pixel to pixel and across the CCD. There are separate files for each of the 12 WAC filters and for the NAC, with on-chip pixel binning turned on or not.
	MDISWAC_bining_FLAT_FILT_nn_v.FIT	No	**bining** = binning, NOTBIN or BINNED **nn** = filter number, 1-12 **v** = version number, 0-9, a-z
	MDISWAC_bining_FLAT_FILT_nn_v.LBL	No	Detached labels describing the WAC flat-field images.
	MDISNAC_bining_FLAT_v.FIT	No	**bining** = binning, NOTBIN or BINNED **v** = version number, 0-9, a-z
	MDISNAC_bining_FLAT_v.LBL	No	Detached labels describing the NAC flat-field images.
RESPONSIVITY/		No	This directory contains tables of coefficients used to convert corrected DN to units of radiance. There are separate tables for the

			WAC and NAC, with on-chip pixel binning turned on or not.
	MDIScam_bining_RESP_v.TAB	No	**cam** = camera, NAC or WAC **bining** = binning, NOTBIN or BINNED **v** = version number, 0-9, a-z
	MDIScam_bining_RESP_v.LBL	No	Detached labels describing the tables.
SOLAR/		No	This directory contains tables of solar irradiance used to convert radiance to units of I/F. There are separate tables for the WAC and NAC.
	MDIScam_SOLAR_v.TAB	No	**cam** = camera, NAC or WAC **v** = version number, 0-9, a-z
	MDIScam_SOLAR_v.LBL	No	Detached labels describing the tables.
SUPPORT/		No	This directory contains characterizations of the instrument that are not part of the calibration process per se, but were used to derive the calibration files that are used.
	MDISLUTFWD_0.TAB	No	Contains the onboard forward lookup tables used optionally to convert 12-bit to 8-bit images.
	MDISLUTFWD_0.LBL	No	The label that describes the preceding file.
	MDISBPWa.TAB	No	Tables giving bandpasses for each WAC filter and for the NAC. **a** = A through M for different filters For the NAC, **a** = M For the WAC, **a** = A for Filter 1, 700 BP 5; B for Filter 2, 700 BP 600; C for Filter 3, 480 BP 10; D for Filter 4, 560 BP 5; E for Filter 5, 630 BP 5; F for Filter 6, 430 BP 40; G for Filter 7, 750 BP 5; H for Filter 8, 950 BP 7; I for Filter 9, 1000 BP 15; J for Filter 10, 900 BP 5; K for Filter 11, 1020 BP 40; L for Filter 12, 830 BP 5

Table 3-13: Calib Directory Contents.

3.3.10 Label Directory

The Label Directory (Table 3-14) contains files that describe data format and organization; for example, the definition, size, data type, etc. of each column in a table (file with a *.TAB suffix). These format files (*.FMT suffix) are referenced by PDS labels that accompany data products. They are "include" files that are intended to be parsed as if they were part of the PDS labels that point to them. The purposes of keeping this information in a separate file are (a) to keep labels short and (b) to allow the information to be updated without having to update many labels. As of this writing, none of the labels reference *.FMT files. The following files are contained in the Label Directory if present.

File Name	Required?	File Contents
LABINFO.TXT	No	Identifies and describes the function of each file in the label directory.
*.FMT files	No	Generic descriptions of contents of TAB files containing housekeeping.

Table 3-14: Label Directory Contents.

3.3.11 Browse Directory

The BROWSE directory contains synoptic versions of data products to help identify products of interest. There are browse products for CDRs, BDRs, and MDRs in the appropriate archive volumes. At the top of the directory structure, BROWINFO.TXT contains a description of the contents of this directory. Each set of browse products is organized into a separate subdirectory, named "CDR", "BDR", or "MDR". Within each subdirectory the organization follows that of the directories containing the data products.

The browse products are scaled from I/F into Portable Network Graphics (PNG) format. CDR and BDR browse products are single-band, while MDR browse products are RGB. Each browse data product has a detached PDS label that describes the source CDRs and RDRs and the scaling between raw data values and the PNG files. Sample BROWSE image labels can be found in Appendices G-I.

3.3.12 Extras Directory

TBD.

4. APPLICABLE SOFTWARE

4.1 Utility Programs

Standard Integrated Software for Imagers and Spectrometers (ISIS) tools (http://isis.astrogeology.usgs.gov/) can be used to work with the data. ISIS has the ability to calibrate EDRs, incorporating related SPICE files and map-projected images.

4.2 Applicable PDS Software Tools

PDS-labeled images and tables can be viewed with the program NASAView, developed by the PDS and available for a variety of computer platforms from the PDS web site http://pdsproto.jpl.nasa.gov/Distribution/license.html.

INDEX

BDR, 7, 9, 26, 27, 40, 47, 48, 49, 50, 51, 58, 96, 98, 110
BROWSE, 36, 58, 106, 109, 110, 112
Calibration, 10, 21, 22, 26, 28, 30, 35, 56
CDR, 7, 9, 10, 11, 26, 27, 28, 40, 41, 42, 44, 45, 48, 52, 56, 58, 87, 106
DDR, 7, 9, 26, 27, 44, 45, 47, 58, 91
EDR, 7, 9, 10, 11, 27, 62, 64
I/F, 7, 26, 27, 30, 41, 42, 44, 47, 48, 51, 52, 96, 100
Map Projection Standards, 40, 49, 52, 71
MDR, 7, 9, 26, 27, 40, 51, 52, 54, 55, 58, 100, 103, 112
RDR, 7, 9, 10, 11, 27, 30, 40, 51, 54, 58
SPICE, 7, 8, 35, 45, 64, 65, 68

APPENDIX A. DATA ARCHIVE TERMS

Archive	An archive consists of one or more data sets along with all the documentation and ancillary information needed to understand and use the data. An archive is a logical construct independent of the medium on which it is stored.
Archive volume, archive volume set	A volume is a unit of medium on which data products are stored; for example, one DVD. An archive volume is a volume containing all or part of an archive; that is, data products plus documentation and ancillary files. When an archive spans multiple volumes, they are called an archive volume set. Usually the documentation and some ancillary files are repeated on each volume of the set, so that a single volume can be used alone.
Calibrated Data Records (CDRs)	Image data calibrated to radiance, or processed further to I/F or I/F corrected to i = 30º, e = 0º (NAC or WAC). CODMAC level 4.
Data Product	A labeled grouping of data resulting from a scientific observation, usually stored in one file. A product label identifies, describes, and defines the structure of the data. An example of a data product is a planetary image, a spectrum table, or a time series table.
Data Set	An accumulation of data products. A data set together with supporting documentation and ancillary files is an archive.
Derived Data Records (DDRs)	Geometric data registered to non-map-projected image data and used for correction from I/F to I/F corrected to i = 30º, e = 0º (NAC or WAC). CODMAC level 6.
Experiment Data Records (EDRs)	Non-map-projected raw data (NAC or WAC). CODMAC level 2.
Map Projected Basemap Reduced Data Records (BDRs)	Map-projected I/F, I/F corrected to i = 30º, e = 0º, and relevant DDR layers (NAC or WAC filter 7). CODMAC level 5.
Map Projected Multispectral Reduced Data Records (MDRs)	Map-projected I/F, I/F corrected to i = 30º, e = 0º, and relevant DDR layers (WAC filters 1, 3-12). CODMAC level 5.
Standard data product	A data product defined during the proposal and selection process and that is contractually promised by the PI as part of the investigation. Standard data products are generated in a predefined way, using well-understood procedures, and processed in “pipeline” fashion.

APPENDIX B. LABEL AND HEADER DESCRIPTIONS

The keywords listed below appear in the example labels found in Appendices B – I.

PDS_VERSION_ID
The version number of the PDS standards documents that is valid when a data product label is created. PDS3 is used for the MESSENGER Data products.

File format parameters

RECORD_TYPE
The record format of a file.

RECORD_BYTES
The number of bytes in a physical file record, including record terminators and separators.

FILE_RECORDS
The number of physical file records, including both label records and data records.

LABEL_REVISION_NOTE
Provides information regarding the revision status and authorship of a PDS label.

^IMAGE
The pointer to a full image object. This object contains all the sub-frames which correspond to a given observation. The sub-frames are arrayed in their respective positions corresponding to a full frame observation. The value contains the starting record position in the file.

General data description parameters

MISSION_NAME
Identifies the MESSENGER planetary mission.

INSTRUMENT_HOST_NAME
The full, unabbreviated name of the spacecraft.

DATA_SET_ID
Uniquely identifies the data sets available on the volume.

DATA_QUALITY_ID
A data quality index is used to encode figures-of-merit into one parameter that is included in the label of each CDR or DDR. The 16-byte data quality index is interpreted as follows:

```
Byte 0: Image source is CCD.
            1 = Image source is test pattern as indicated by
                  MESS:SOURCE=1=Test pattern or
                  MESS:SOURCE=2=Inverted test pattern.
```

0 = Image source is CCD as indicated by MESS:SOURCE=0=CCD.

Byte 1: Non-zero exposure time.

1 = Exposure time in ms as indicated by MESS:EXPOSURE equals 0 ms.

0 = Exposure time in ms as indicated by MESS:EXPOSURE is greater than 0 ms.

Byte 2: Presence of an excessive number of pixels at or approaching saturation.

As saturation is approached responsivity decreases, and signal becomes nonlinear with brightness for small sources. Saturation can be exceeded for very bright or large sources once pixel antiblooming is overwhelmed. The raw DN level indicative of the onset of saturation varies between the two CCDs. In the WAC (MESS:IMAGER=0) it is approximately 3600; in the NAC (MESS:IMAGER=1) it is approximately 3400. In autoexposure mode, the typical threshold for the allowable number of saturated pixels is 5 pixels. In manual exposure mode the number of saturated pixels is uncontrolled.

1 = There are > 5 pixels exceeding the DN indicating onset of saturation.

0 = There are < 5 pixels exceeding the DN indicating onset of saturation.

Byte 3: Valid pivot position.

1 = Pivot position not valid, as indicated by pivot position validity flag MESS:PIV_PV=0=invalid

0 = Pivot position valid as indicated by both keywords having a value of 1=valid.

Byte 4: Filter wheel in position (WAC only; requires MESS:IMAGER=0, or else value of this byte = 0).

1 = Filter wheel not in position, as indicated by any of three conditions:

(a) filter wheel position validity flag MESS:FW_PV=0=invalid,

(b) filter wheel reading validity flag MESS:FW_RV=0=invalid, or

(c) an excessive difference between filter wheel resolver goal and actual position as given in table below.

0 = Filter wheel in position as indicated by an allowable difference between goal and position, and by both MESS:FW_PV=1 and MESS:FW_RV=1 (See Table B-1).

Table B-1: Filter wheel encoder positions

FILTER_NUMBER	MESS:FW_GOAL	Allowable (abs(MESS:FW_POS - MESS:FW_GOAL))
1	17376	+/- 240
2	11976	+/- 240
3	6492	+/- 240
4	1108	+/- 240
5	61104	+/- 240
6	55684	+/- 240
7	50148	+/- 240
8	44760	+/- 240
9	39256	+/- 240
10	33796	+/- 240
11	28252	+/- 240
12	22852	+/- 240

Byte 5: Quality of spacecraft attitude knowledge.
1 = Spacecraft attitude knowledge is bad (MESS:ATT_FLAG is in the range 0-3).
0 = Spacecraft attitude knowledge is good (MESS:ATT_FLAG is in the range 5-7).

Byte 6: CCD temperature range.
1 = CCD out of temperature range at which performance is well calibrated (MESS:CCD_TEMP is outside a range of between 1042 and 1120, which for the WAC is -35C to -14 C, and for the NAC is -38C to -16C).
0 = CCD within well calibrated temperature range (MESS:CCD_TEMP is within the stated range).

Byte 7: Completeness of data within the commanded selection of subframes or full frame.
Missing frames or portions of frames are indicated in an EDR with a value of 0 (this cannot be a valid data value).
1 = There are missing data (some pixels populated with 0).
0 = There are no missing data.

Bytes 8-15: spare.

PRODUCT_ID
The permanent, unique identifier assigned to a data product by its producer. In the PDS, the value assigned to product_id must be unique within its data set.

PRODUCT_TYPE
Identifies the type or category of a product within the data set.

PRODUCT_VERSION_ID
Identifies the version of an individual product within the data set.

SOURCE_PRODUCT_ID

This is a set of input files used as input to create this product. The first element is the original spacecraft solid state recorder (SSR) filename as downlinked. Additional elements are the SPICE kernels used to produce the ancillary data.

PRODUCER_INSTITUTION_NAME
The organization responsible for developing the data products.

SOFTWARE_NAME
The name of the software system that created the data products. The version number of the software is identified by the SOFTWARE_VERSION_ID keyword.

SOFTWARE_VERSION_ID
Version of the software used to generate the data products.

MISSION_PHASE_NAME
Provides the commonly-used identifiers of the MESSENGER Mission Phase. These are (From Memorandum SRP-03-2006 rev 14 April 2006, MESSENGER Mission Phase Definitions, R.L. McNutt, Jr., see Appendix K):

EARTH CRUISE
EARTH FLYBY
VENUS 1 CRUISE
VENUS 1 FLYBY
VENUS 2 CRUISE
VENUS 2 FLYBY
MERCURY 1 CRUISE
MERCURY 1 FLYBY
MERCURY 2 CRUISE
MERCURY 2 FLYBY
MERCURY 3 CRUISE
MERCURY 3 FLYBY
MERCURY 4 CRUISE
MERCURY ORBIT

TARGET_NAME
Identifies the target. (Such as: MERCURY, VENUS, EARTH, MOON, OTHER).

SEQUENCE_TITLE
Identifies the imaging sequence name.

Time parameters

START_TIME
The UTC date and time for the start of the exposure.

STOP_TIME
The UTC date and time for the end of the exposure.

SPACECRAFT_CLOCK_START_COUNT
Clock count of the spacecraft computer at the start of the expsoure. For MESSENGER, this is also known as the Mission Elapsed Time (MET). MESSENGER has a two stage clock. The clock partition is added to the beginning of the two stages. The three parts of this value are formatted as follows:

- P/SSSSSSSSSS:TTTTTT

- P = SPICE clock partition
- S = first stage, spacecraft clock seconds
- T = second stage, spacecraft clock microseconds

SPACECRAFT_CLOCK_STOP_COUNT
Clock count of the spacecraft computer at the end of the exposure. For MESSENGER, this is also known as the Mission Elapsed Time (MET). See **SPACECRAFT_CLOCK_START_COUNT** for format.

PRODUCT_CREATION_TIME
The time in UTC when the data product was created.

Instrument engineering parameters

INSTRUMENT_NAME
The FULL name of the instrument. Note that the associated INSTRUMENT_ID element provides an abbreviated name or acronym for the instrument, which includes the camera that was being used.

INSTRUMENT_ID
Abbreviated name or acronym which identifies the instrument. In this case it is either MDIS-WAC or MDIS-NAC (for the WIDE ANGLE CAMERA or NARROW ANGLE CAMERA).

FILTER_NAME
Filter names are descriptive names of the filter used for the WAC camera. The NAC has no filter wheel so it is "N/A" for the NAC.

FILTER_NUMBER
Provides the number of the WAC filter wheel through which an image or measurement was acquired. The NAC has no filter wheel so it is "N/A" for the NAC.

CENTER_FILTER_WAVELENGTH
The mid point wavelength value between the minimum and maximum instrument filter wavelength values. A table showing the relationship between filter number, center wavelength, and bandwidth can be found in section 2.16, Filters. The NAC has no filter wheel so it is "N/A" for the NAC.

BANDWIDTH
A measure of the spectral width of a filter (nanometers). For a root-mean-square detector this is the effective bandwidth of the filter i.e., the full width of an ideal square filter having a flat response over the bandwidth and zero response elsewhere. The NAC has no filter wheel so it is "N/A" for the NAC.

EXPOSURE_DURATION
The exposure duration (integration time) of the image observation expressed in milliseconds.

EXPOSURE_TYPE
The MDIS exposure setting. There are two settings – "AUTO" is the automatic exposure setting, and "MANUAL" is a manually commanded exposure setting.

DETECTOR_TEMPERATURE

Temperature of the CCD in degrees Celsius at the time the observation was made. The conversion formula depends on the camera performing the observation:

For WAC:
Temperature = -318.4553 + Raw * 0.2718

For NAC:
Temperature = -323.3669 + Raw * 0.2737

Where Raw is the raw counts in telemetry (MESS:CCD_TEMP).

FOCAL_PLANE_TEMPERATURE
The element indicates the temperature of the focal plane array in degrees Celsius at observation time. The conversion formula depends on the camera performing the observation:

For WAC:
Temperature = -263.2584 + Raw * 0.5022

For NAC:
Temperature = -268.8441 + Raw * 0.5130

Where Raw is the raw counts in telemetry (MESS:CAM_T1).

FILTER_TEMPERATURE
The temperature of the filter wheel. A single telemetry point is used to return the Filter Wheel or the Telescope temperature, depending on which camera is in use. Thus, this parameter is "N/A" if the NAC was used for the observation because the telemetry point will be a measurement of the NAC telescope temperature. The conversion from Raw counts to degrees Celsius is:

Temperature = -292.7603 + Raw * 0.5553

Where Raw is the raw counts in telemetry (MESS:CAM_T2).

OPTICS_TEMPERATURE
The temperature of the NAC telescope. A single telemetry point is used to return the Filter Wheel or the Telescope temperature, depending on which camera is in use. Thus this parameter is "N/A" if the WAC was used for observation because the telemetry point will be a measurement of the WAC filter wheel temperature. The conversion from Raw counts to degrees Celsius is:

Temperature = -269.7180 + Raw * 0.4861

Where Raw is the raw counts in telemetry (MESS:CAM_T2).

Geometry information

RIGHT_ASCENSION
The right ascension of the camera boresight. The values are specified relative to the J2000 inertial reference frame.

DECLINATION

The declination of the camera boresight. The values are specified relative to the J2000 inertial reference frame.

TWIST_ANGLE
The angle of rotation about an optical axis relative to celestial coordinates. It is defined as (180- CELESTIAL_NORTH_CLOCK_ANGLE) mod 360. Where CELESTIAL_NORTH_CLOCK_ANGLE is the direction of celestial north at the center of an image. It is measured from the 'upward' direction, clockwise to the direction toward celestial north (declination = +90 degrees), when the image is displayed left to right and top to bottom. The epoch of the celestial coordinate system is J2000.

RA_DEC_REF_PIXEL
Specifies the reference pixel to which the right_ascension and declination apply.

RETICLE_POINT_RA
The right ascension of the principle points of the camera.
Note: For MESSENGER the principle points are defined as the upper left pixel of the camera (line 1,sample 1), the upper right pixel(line 1, last sample), lower left (last line, sample 1), and lower right (last line, last sample).

RETICLE_POINT_DECLINATION
The declination of the principle points of the camera. For MESSENGER the principle points are defined as in RETICLE_POINT_RA.

Target parameters

SC_TARGET_POSITION_VECTOR
X, Y, Z components of the position vector from observer to target center expressed in J2000 coordinates, and corrected for light time and stellar aberration, evaluated at epoch at which the image was taken. Units are expressed in kilometers.

TARGET_CENTER_DISTANCE
Distance between the spacecraft and the center of the named target in kilometers.

Target within sensor field of view parameters

NOTE: Any value computed below which requires the shape of Mercury (ellipsoid radii) as an input, will use values dictated by the science team, and updated during the course of the mission. A MESSENGER SPICE PCK kernel will be used to define any updated Mercury constants.

SLANT_DISTANCE
Distance from spacecraft to the camera boresight intercept point on the surface in kilometers.

CENTER_LATITUDE
CENTER_LONGITUDE
Latitude and longitude at the center of the full image frame.

HORIZONTAL_PIXEL_SCALE

The horizontal picture scale.

VERTICAL_PIXEL_SCALE
The vertical picture scale.

SMEAR_MAGNITUDE
Norm of velocity vector of camera boresight intercept point projected on the target, multiplied by the exposure duration with the scale of the image factored to obtain the smear in pixels. Spacecraft rotation is taken into account. (Units are in pixels.)

SMEAR_AZIMUTH
Azimuth of smear velocity vector. The reference line for the angle extends from the center of the image to the right edge of the image. The angle increases in the clock-wise direction. The angle is measured to the "image" of the smear velocity vector in the camera's focal plane. This image is computed by orthogonal projection of the smear vector onto the image plane and then applying transformations to orient the result properly with respect to the image. The specific transformations to be performed are given by the camera's I-kernel.

NORTH_AZIMUTH
Analogous to smear azimuth, but applies to the target north pole direction vector.

RETICLE_POINT_LATITUDE
RETICLE_POINT_LONGITUDE
Latitudes and longitudes of the surface intercept points of the principle points of the camera. (see RETICLE_POINT_RA for definition of the reticule points for MESSENGER. The units are expressed in degrees.

Spacecraft position with respect to central body

SUB_SPACECRAFT_LATITUDE
SUB_SPACECRAFT_LONGITUDE
Planetocentric latitude and longitude of spacecraft-to-body-center surface intercept vector. These parameters and the SPACECRAFT_ALTITUDE, SUB_SPACECRAFT_AZIMUTH parameters described below are relative to the central body for which the spacecraft is orbiting and not the target of the observation.

SPACECRAFT_ALTITUDE
Altitude of the spacecraft above a reference ellipsoid. Distance is measured to closest point on ellipsoid.

SUB_SPACECRAFT_AZIMUTH
Azimuth angle of sub-spacecraft point in image. Method of measurement is the same as for SMEAR_AZIMUTH.

Spacecraft Location

SPACECRAFT_SOLAR_DISTANCE

Analogous to TARGET_CENTER_DISTANCE but Sun replaces target body in computation.

SC_SUN_POSITION_VECTOR
X ,Y ,Z components of the position vector from observer to sun, center expressed in J2000 coordinates and corrected for light time and stellar aberration, evaluated at epoch at which image was taken. Units are kilometers.

SC_SUN_VELOCITY_VECTOR
x-, y-, and z- components of velocity vector of sun relative to the observer, expressed in J2000 coordinates, and corrected for light time, evaluated at epoch at which image was taken. Units are kilometers per second.

Viewing and lighting geometry

SOLAR_DISTANCE
Distance from target body center to Sun. The Sun position used is that described above.

SUB_SOLAR_AZIMUTH
Azimuth of the apparent sub-solar point, as seen by the spacecraft. This point is the surface intercept of the target-center-to-Sun vector, evaluated at the camera epoch minus one-way light time from target to spacecraft at that epoch spacecraft at that epoch. Azimuth is measured as described above. Target body position relative to the spacecraft is corrected for light-time and stellar aberration. Target body orientation is corrected for light-time.

SUB_SOLAR_LATITUDE
SUB_SOLAR_LONGITUDE
Planetocentric latitude and longitude of the apparent sub-solar point.

INCIDENCE_ANGLE
Provides a measure of the lighting condition at the intercept point. Incidence angle is the angle between the local vertical at the intercept point (surface) and a vector from the intercept point to the sun. The incidence_angle varies from 0 degrees when the intercept point coincides with the sub_solar point to 90 degrees when the intercept point is at the terminator (i.e., in the shadowed or dark portion of the target body). Thus, higher values of incidence_angle indicate the existence of a greater number of surface shadows.

PHASE_ANGLE
Provides a measure of the relationship between the instrument viewing position and incident illumination (such as solar light). Phase_angle is measured at the target; it is the angle between a vector to the illumination source and a vector to the instrument. If not specified, the target is assumed to be at the center of the instrument field of view. If illumination is from behind the instrument, phase_angle will be small.

EMISSION_ANGLE
Provides the value of the angle between the surface normal vector at the intercept point and a vector from the intercept point to the spacecraft. The emission_angle varies from 0 degrees when the spacecraft is viewing the subspacecraft point (nadir viewing) to 90 degrees when the intercept is

tangent to the surface of the target body. Thus, higher values of emission_angle indicate more oblique viewing of the target.

LOCAL_HOUR_ANGLE
Angle from the negative of the target-body-to-Sun vector to the projection of the negative of the spacecraft-to-target vector onto the target's instantaneous orbital plane. Both vectors are computed as in the sub-spacecraft point computation. The angle is measured in a counterclockwise direction when viewed from North of the ecliptic plane.

IMAGE Object

LINES
Total number of data instances along the vertical axis of an image.
Note: In PDS label convention; the number of lines is stored in a 32-bit integer field. The minimum value of 0 indicates no data received. For compressed images this value represents the total number of data instances along the vertical axis once the image has been uncompressed.

LINE_SAMPLES
Total number of data instances along the horizontal axis of an image. For compressed images the keyword value is the for the total number of data instances along the horizontal axis once the image has been uncompressed.

SAMPLE_TYPE
Data storage representation of the sample value.

SAMPLE_BITS
Stored number of bits, or units of binary information, contained in a line_sample value.

UNIT
The unit element provides the full name or standard abbreviation of a unit of measurement in which a value is expressed.

BANDS
The number of bands in the image.

BAND_STORAGE_TYPE
The storage sequence of lines, samples, and bands in the image. The values describe, for example, how different samples are interleaved in image lines, or how samples from different bands are arranged sequentially.

BAND_NAME
The name given to a single band in a multi-band image or image qube.

PHOTOMETRIC_CORRECTION_TYPE
Indicated the type of photometric correction applied to the data.

USAGE_NOTE
Provides information about the use of a particular data element or object.

IMAGE Map Projection Object

^DATA_SET_MAP PROJECTION
Pointer to the map projection catalog object.

MAP_PROJECTION_TYPE
Identifies the type of projection characteristic of a given map.

A_AXIS_RADIUS
Provides the value of the semimajor axis of the ellipsoid that defines the approximate shape of a target body. 'A' is usually in the equatorial plane.

B_AXIS_RADIUS
Provides the value of the intermediate axis of the ellipsoid that defines the approximate shape of a target body. 'B' is usually in the equatorial plane.

C_AXIS_RADIUS
Provides the value of the semiminor axis of the ellipsoid that defines the approximate shape of a target body. 'C' is normal to the plane defined by 'A' and 'B'.

FIRST_STANDARD_PARALLEL
Valid only for Conic projections.

SECOND_STANDARD_PARALLEL
Valid only for Conic projections.

POSITIVE_LONGITUDE_DIRECTION
Identifies the direction of longitude (e.g. EAST, WEST) for a planet.

CENTER_LATITUDE
Provides a reference latitude for certain map projections. The map_scale (or map_resolution) is typically defined at the center_latitude and center_longitude.

CENTER_LONGITUDE
Provides a reference longitude for certain map projections. The map_scale (or map_resolution) is typically defined at the center_latitude and center_longitude.

REFERENCE_LATITUDE
Provides the new zero latitude in a rotated spherical coordinate system that was used in a given map_projection_type.

REFERENCE_LONGITUDE
Defines the zero longitude in a rotated spherical coordinate system that was used in a given map_projection_type.

LINE_FIRST_PIXEL
Provides the line index for the first pixel that was physically recorded at the beginning of the image array.

LINE_LAST_PIXEL
Provides the line index for the last pixel that was physically recorded at the end of the image array.

SAMPLE_FIRST_PIXEL

Provides the sample index for the first pixel that was physically recorded at the beginning of the image array.

SAMPLE_LAST_PIXEL
Provides the sample index for the last pixel that was physically recorded at the end of the image array.

MAP_PROJECTION_ROTATION
Provides the clockwise rotation, in degrees, of the line and sample coordinates with respect to the map projection origin. This parameter is used to indicate where 'up' is in the projection.

MAP_RESOLUTION
Identifies the scale of a given map.

MAP_SCALE
Identifies the scale of a given map.

MAXIMUM_LATITUDE
Specifies the northernmost latitude of a spatial area.

MINIMUM_LATITUDE
Specifies the southernmost latitude of a spatial area.

WESTERNMOST_LONGITUDE
For Planetocentric coordinates and for Planetographic coordinates in which longitude increases toward the east, the westernmost (leftmost) longitude of a spatial area is the minimum numerical value of longitude unless it crosses the Prime Meridian.

EASTERNMOST_LONGITUDE
For Planetocentric coordinates and for Planetographic coordinates in which longitude increases toward the east, the easternmost (rightmost) longitude of a spatial area is the maximum numercial value of longitude unless it crosses the Prime Meridian.

LINE_PROJECTION_OFFSET
Provides the line offset value of the map projection origin position from the line and sample 1,1 (line and sample 1,1 is considered the upper left corner of the digital array). Note: that the positive direction is to the right and down.

SAMPLE_PROJECTION_OFFSET
Provides the sample offset value of the map projection origin position from line and sample 1,1 (line and sample 1,1 is considered the upper left corner of the digital array). Note: that the positive direction is to the right and down.

COORDINATE_SYSTEM_TYPE
There are three basic types of coordinate systems: body-fixed rotating, body-fixed non-rotating and inertial. A body-fixed coordinate system is one associated with a body (e.g., planetary body or satellite). In contrast to inertial coordinate systems, a body-fixed coordinate system is centered on the body and rotates with the body (unless it is a non-rotating type). For the inertial coordinate system type, the coordinate system is fixed at some point in space.

COORDINATE_SYSTEM_NAME
Provides the full name of the coordinate system to which the state vectors are referenced.

MDIS INSTRUMENT RAW PARAMETERS

MESS:MET_EXP
The mission-elapsed-time, or MET, in seconds since MESSENGER launch of the second during which an MDIS image completes its exposure.

MESS:ATT_CLOCK_COUNT
The mission-elapsed-time, or MET, in seconds since MESSENGER launch, of the second during which the spacecraft attitude measurement in the header of an MDIS image was acquired.

MESS:ATT_Q1
The roll value of the vector component of the attitude quaternion representing spacecraft attitude, in the header of an MDIS image.

MESS:ATT_Q2
The pitch value of the vector component of the attitude quaternion representing spacecraft attitude, in the header of an MDIS image.

MESS:ATT_Q3
The yaw value of the vector component of the attitude quaternion representing spacecraft attitude, in the header of an MDIS image.

MESS:ATT_Q4
The scalar component of the attitude quaternion representing spacecraft attitude, in the header of an MDIS image.

MESS:ATT_FLAG
Attitude quality flag for the spacecraft attitude quaternion in the header of an MDIS image:

7 = Attitude Knowledge OK (At least 1 Star Tracker is available and at least 50% of gyro data is valid)

6 = Attitude Knowledge OK (No Star Tracker is available but at least 50% of gyro data is valid)

5 = Attitude Knowledge OK (No Star Tracker is and between 10% and 50% of gyro data is valid -OR- At least 1 Star Tracker is valid and between 0% and 50% of gyro data valid)

4 = not a legal option
3 = Attitude Knowledge BAD (At least 1 Star Tracker is available and at least 50% of gyro data is valid)

2 = Attitude Knowledge BAD (No Star Tracker is available but at least 50% of gyro data is valid)

1 = Attitude Knowledge BAD (No Star Tracker is available and between 10% and 50% of gyro data is valid -OR- At least 1 Star Tracker is valid and between 0% and 50% of gyro data is valid)

0 = Attitude Knowledge BAD (No Star Tracker data fewer than 10% of gyro data valid).

MESS:PIV_GOAL
The commanded position of the MDIS pivot during exposure of an MDIS image, in increments of (180 DEGREES / (2**15)) with zero at nadir. -180 degrees is stowed.

MESS:PIV_POS
The actual position of the MDIS pivot during exposure of an MDIS image, in increments of (180 DEGREES / (2**15)) with zero at nadir. -180 degrees is stowed.

MESS:PIV_READ
Raw pivot reading from resolver (in units of resolver counts) in increments of (180 DEGREES / (2**15)). The pivot platform resolver only covers 45 degrees of motion; the resolver read-out values repeat eight times over the entire 360 degrees that an unconstrained platform could travel.

MESS:PIV_CAL
The offset in measured pivot position applied to MESS:PIV_POS and MESS:PIV_GOAL so that zero is as close as possible to true spacecraft nadir (+z axis). The correction is in increments of (180 DEGREES / (2**15)).

MESS:FW_GOAL
The goal position, in raw counts of the position resolver on the MDIS filter wheel. For each commanded filter number, the instrument software will try to place the filter wheel at the positions listed in Table B-1. Actual position attained is reported in MESS:FW_POS.

MESS:FW_POS
The actual position, in raw counts of the position resolver on the MDIS filter wheel. For each commanded filter number, the instrument software will try to place the filter wheel at the positions listed in Table B-1. Commanded position is reported in MESS:FW_GOAL. There is a tolerance of 240 resolver counts around MESS:FW_GOAL for MESS:FW_POS to indicate that the filter wheel is correctly positioned.

MESS:FW_READ
The raw value from the MDIS filter wheel resolver in resolver counts. It is used by the flight software to compute MESS:FW_POS. For each commanded filter number, the instrument software will try to place the filter wheel at the positions listed in Table B-1. Commanded position is reported in MESS:FW_GOAL. There is a tolerance of 240 resolver counts around MESS:FW_GOAL for MESS:FW_POS to indicate that the filter wheel is correctly positioned.

MESS:CCD_TEMP
MDIS CCD temperature in raw counts. The conversion formula to degrees Celsius depends on the camera performing the observation:

For WAC:
Temperature = -318.4553 + Raw * 0.2718

For NAC:
Temperature = -323.3669 + Raw * 0.2737

Where Raw is the raw counts in telemetry (MESS:CCD_TEMP).

MESS:CAM_T1
The temperature of the focal plane array in raw counts at observation time. The conversion formula to degrees Celsius depends on the camera performing the observation:

For WAC:
Temperature = -263.2584 + Raw * 0.5022

For NAC:
Temperature = -268.8441 + Raw * 0.5130

Where Raw is the raw counts in telemetry (MESS:CAM_T1).

MESS:CAM_T2
Camera temperature 2 in raw counts. The meaning depends on whether it is being reported by the WAC or NAC. A single telemetry point is used to return the raw value of filter wheel temperature (WAC), FILTER_TEMPERATURE once converted to units of degrees Celsius, or the raw value of telescope temperature (NAC), OPTICS_TEMPERATURE once converted to units of degrees Celsius, depending on which camera is in use.

For the WAC, this is temperature of the filter wheel. Thus, FILTER_TEMPERATURE is "N/A" if the NAC was used for the observation because the telemetry point will be a measurement of the NAC telescope temperature. For the WAC the conversion from raw counts to degrees

Celsius is:

T = -292.7603 + Raw * 0.5553

where Raw is the raw counts in MESS:CAM_T2.

For the NAC, this is temperature of the NAC telescope. Thus OPTICS_TEMPERATURE is "N/A" if the WAC was used for observation because the telemetry point will be a measurement of the WAC filter wheel temperature.

For the NAC the conversion from raw counts to degrees Celsius is:

T = -269.7180 + Raw * 0.4861

where Raw is the raw counts in telemetry (MESS:CAM_T2).

MESS:EXPOSURE
MDIS exposure time in milliseconds.

MESS:DPU_ID
The identified of the DPU used during acquisition of an MDIS image:

0 = DPU-A
1 = DPU-B.

MESS:IMAGER
Which of the two cameras was used during acquisition of an MDIS image:

0 = WAC
1 = NAC.

MESS:SOURCE
Source of an MDIS image, either a scene image from the CCD or one of two test patterns:

0 = CCD
1 = Test pattern
2 = Inverted test pattern.

MESS:FPU_BIN
On-chip image binning option for MDIS. Images may be taken either without on-chip binning or with 2x2 binning, which decreases the size of a full image from 1024x1024 pixels to 512x512 pixels. On-chip binning can be used to manage the size of raw images being stored on the spacecraft solid-state recorder, or to increase CCD sensitivity. If this option is used, sensitivity increases by about a factor of four but read noise is similar:

0 = 1x1 binning (none)
1 = 2x2 binning.

MESS:COMP12_8
12 to 8 bit image compression enabled or disabled. Which algorithm is used is specified by MESS:

0 = disabled (images are 12-bit)
1 = enabled (images are 8-bit).

MESS:COMP_ALG
12 to 8 bit compression algorithm (0-7) used to compress images from 12 to 8 bits. Whether this option is enabled is indicated by MESS:COMP12_8. The compression is implemented using one of eight lookup tables, which are optimized to the lower WAC CCD read noise and higher NAC read noise, light levels, and bias level (nominal or after inflight drift):

0 = Lo-noise hi-bias SNR proportional. Case: Either NAC or WAC, for nominal bias (all DNs greater than 12-bit 230). Formulation: Maps 12-bit DNs between bias and saturation into 8 bits, proportional to SNR. Information loss is spread evenly over dynamic range. Usage: Typical imaging with varied brightness.

1 = Lo-noise hi-bias DN-weighted SNR proportional. Case: Low-noise (WAC) CCD, bias nominal (all DNs greater than 12-bit 230). Formulation: Maps 12 bits between bias and saturation into 8 bits proportional to sliding scale. Information is preferentially retained at the low DN end. Usage: Faint objects. Saturates at a DN of 3000.

2 = Hi-noise hi-bias DN-weighted SNR proportional. Case: High-noise (NAC) CCD, bias nominal (all DNs greater than 12-bit 230). Formulation: Maps 12 bits between bias and saturation into 8 bits proportional to sliding scale. Information is preferentially retained at the low DN end. Usage: B/W, mostly low brightness.

3 = Lo-noise med-bias SNR proportional. Case: Either CCD, assuming bias has dropped tens DN (all DNs greater than 12-bit 180). Formulation: Maps 12-bit DNs between bias and saturation into 8 bits, proportional to SNR. Information loss is spread over dynamic range. Usage: Typical imaging, varied brightness.

4 = Lo-noise med-bias DN-weighted SNR proportional. Case: Lo-noise (WAC) CCD, assuming bias has dropped tens DN (all DNs greater than 12-bit 180). Formulation: Maps 12 bits between bias and saturation into 8 bits proportional to sliding scale. Information retained at low DN end. Usage: Faint objects. Saturates at a DN of 3000.

5 = Hi-noise med-bias DN-weighted SNR proportional. Case: High-noise (NAC) CCD, assuming bias has dropped tens DN (all DNs greater than 12-bit 180). Formulation: Maps 12 bits between bias and saturation into 8 bits proportional to sliding scale. Information is retained preferentially at the low end of the DN range. Usage: B/W, mostly low brightness.

6 = Zero-bias SNR proportional. Case: Contingency; assuming bias decreased to near 0 from the nominal 230 12-bit DNs. Formulation: Maps 12-bit DNs between bias and saturation into 8 bits, proportional to SNR. Information loss is spread over the dynamic range. Usage: Typical imaging, varied brightness.

7 = Linear. Case: either CCD, bias or read noise. Formulation: Maps 12-bit DNs between the bias level and saturation linearly into 8-bit space. Usage: High brightness mapping; information loss greatest at low DNs, preserves information at high DNs.

MESS:COMP_FST
Status of lossless Fast compression of MDIS images. This is applied to images by the instrument itself. The images are first uncompressed on the solid-state recorder if lossy wavelet compression is applied:

0 = Fast disabled
1 = Fast enabled.

MESS:TIME_PLS
Source of the 1 Hz time pulse used in time-tagging MDIS images:

0 = Software
1 = Main Processor A (MP-A)
2 = Main Processor B (MP-B)
3 = Software.

MESS:LATCH_UP
Indicator if MDIS FPU is latched up. If the value is 1 then the image data are probably invalid.

0 = OK
1 = Latched.

MESS:EXP_MODE
Exposure time mode used for acquisition of an MDIS image. Manual exposure uses a pre-commanded exposure time. Autoexposure determines the exposure time from test images taken before the exposure, targeting a specific brightness value.

0 = Manual

1 = Automatic.

MESS:PIV_STAT
Pivot control state of MDIS.

A resolver provides a position reading of the pivot platform. The resolver only covers 45 degrees of motion; the resolver read-out values repeat eight times over the entire 360 degrees that an unconstrained platform could travel. The DPU software must determine in which of the eight octants the platform is located before the resolver reading is meaningful. The software combines the octant with the resolver reading to form a position that covers the entire 360 degrees.

To determine the octant the DPU software must be commanded to 'home' the platform. To home the pivot platform, the software drives the motor open loop backwards into the hard stop at -185 degrees. Then the software drives the motor forward, open loop, prepositioning it to -179 degrees. Until homing is completed, the pivot platform is considered 'lost' and all other pivot commands will remain pending.

This status item describes that state of the pivot in determining this position knowledge.

0 = Lost
1 = Searching
2 = Found
3 = OK.

MESS:PIV_MPEN
Status of main processor (MP) control of the MDIS pivot. If this is enabled, then the pivot goes to a position broadcast by the MP that points MDIS to nadir or some other aimpoint. If not enabled then a discrete pivot position is commanded.

0 = Disabled
1 = Enabled.

MESS:PIV_PV
Validity flag for position of the MDIS pivot given in MESS:PIV_POS.

0 = invalid
1 = valid.

MESS:PIV_RV
Validity flag for reading of the MDIS pivot given in MESS:PIV_READ.

0 = invalid
1 = valid.

MESS:FW_PV
Validity flag for position of the MDIS filter wheel given in MESS:FW_POS.

0 = invalid
1 = valid.

MESS:FW_RV

Validity flag for reading of the MDIS filter wheel given in MESS:FW_READ.

0 = invalid
1 = valid.

MESS:AEX_STAT
The bin in a DPU histogram of image brightness used for MDIS automatic exposure time calculation.

In a test image that it analyzed to determine an exposure time using automatic exposure, DPU hardware generates a histogram of the image. The histogram is analyzed by the software to determine if the image is overexposed or underexposed, and the exposure time is adjusted accordingly by analyzing the histogram of raw DN values in different brightness bins. The background or dark current level (MESS:AEX_BACB) is taken into account an is assumed to be a constant value.

A threshold of number of pixels (MESS:AEX_STHR) is allowed to exceed a target brightness (MESS:AEX_TGTB). Starting with the maximum value, the number of pixels exceeding the target is counted, and the brightness of the histogram bin in which that threshold is reached (MESS:AEX_STAT) is reported. The exposure time is scaled back by the ratio of MESS:AEX_TGTB/MESS:AEX_STAT.

MESS:AEX_STHR
The number of pixels allowed to exceed target brightness during an MDIS automatic exposure time calculation.

In a test image that it analyzed to determine an exposure time using automatic exposure, DPU hardware generates a histogram of the image. The histogram is analyzed by the software to determine if the image is overexposed or underexposed, and the exposure time is adjusted accordingly by analyzing the histogram of raw DN values in different brightness bins. The background or dark current level (MESS:AEX_BACB) is taken into account an is assumed to be a constant value.

A threshold of number of pixels (MESS:AEX_STHR) is allowed to exceed a target brightness (MESS:AEX_TGTB). Starting with the maximum value, the number of pixels exceeding the target is counted, and the brightness of the histogram bin in which that threshold is reached (MESS:AEX_STAT) is reported. The exposure time is scaled back by the ratio of MESS:AEX_TGTB/MESS:AEX_STAT.

MESS:AEX_TGTB
The target brightness used for MDIS automatic exposure time calculation.

In a test image that it analyzed to determine an exposure time using automatic exposure, DPU hardware generates a histogram of the image. The histogram is analyzed by the software to determine if the image is overexposed or underexposed, and the exposure time is adjusted accordingly by analyzing the histogram of raw DN values in different brightness bins. The background or dark current level (MESS:AEX_BACB) is taken into account an is assumed to be a constant value.

A threshold of number of pixels (MESS:AEX_STHR) is allowed to exceed a target brightness (MESS:AEX_TGTB). Starting with the maximum value, the number of pixels exceeding the target is counted, and the brightness of the histogram bin in which that threshold is reached (MESS:AEX_STAT) is reported. The exposure time is scaled back by the ratio of MESS:AEX_TGTB/MESS:AEX_STAT.

MESS:AEX_BACB
The background brightness used for MDIS automatic exposure time calculation.

In a test image that it analyzed to determine an exposure time using automatic exposure, DPU hardware generates a histogram of the image. The histogram is analyzed by the software to determine if the image is overexposed or underexposed, and the exposure time is adjusted accordingly by analyzing the histogram of raw DN values in different brightness bins. The background or dark current level (MESS:AEX_BACB) is taken into account an is assumed to be a constant value.

A threshold of number of pixels (MESS:AEX_STHR) is allowed to exceed a target brightness (MESS:AEX_TGTB). Starting with the maximum value, the number of pixels exceeding the target is counted, and the brightness of the histogram bin in which that threshold is reached (MESS:AEX_STAT) is reported. The exposure time is scaled back by the ratio of MESS:AEX_TGTB/MESS:AEX_STAT.

MESS:AEX_MAXE
The maximum allowable exposure time from an MDIS automatic exposure time calculation.

In a test image that it analyzed to determine an exposure time using automatic exposure, DPU hardware generates a histogram of the image. The histogram is analyzed by the software to determine if the image is overexposed or underexposed, and the exposure time is adjusted accordingly by analyzing the histogram of raw DN values in different brightness bins. The background or dark current level (MESS:AEX_BACB) is taken into account an is assumed to be a constant value.

A threshold of number of pixels (MESS:AEX_STHR) is allowed to exceed a target brightness (MESS:AEX_TGTB). Starting with the maximum value, the number of pixels exceeding the target is counted, and the brightness of the histogram bin in which that threshold is reached (MESS:AEX_STAT) is reported. The exposure time is scaled back by the ratio of MESS:AEX_TGTB/MESS:AEX_STAT.

MESS:AEX_MINE
The minimum allowable exposure time from an MDIS automatic exposure time calculation.

In a test image that it analyzed to determine an exposure time using automatic exposure, DPU hardware generates a histogram of the image. The histogram is analyzed by the software to determine if the image is overexposed or underexposed, and the exposure time is adjusted accordingly by analyzing the histogram of raw DN values in different brightness bins. The background or dark current level (MESS:AEX_BACB) is taken into account an is assumed to be a constant value.

A threshold of number of pixels (MESS:AEX_STHR) is allowed to exceed a target brightness (MESS:AEX_TGTB). Starting with the maximum value, the number of pixels exceeding the target is counted, and the brightness of the histogram bin in which that threshold is reached (MESS:AEX_STAT) is reported. The exposure time is scaled back by the ratio of MESS:AEX_TGTB/MESS:AEX_STAT.

MESS:DLNKPRIO
Priority for downlink of an MDIS image file from the MESSENGER spacecraft:

0 Priority #0 (highest)
1 Priority #1
.
.
9 Priority #9 (lowest).

MESS:WVLRATIO
Commanded (lossy) wavelet compression ratio for an MDIS image:

0: no wavelet compression (note: this expands an 8 or 12 bit image to 16 bits per pixel)
1: '1x' compression (actually lossless, with an indeterminate ratio)
2: 2x compression
3: 3x compression
.
.
32: 32x compression.

MESS:PIXELBIN
Pixel binning done to MDIS images by the MESSENGER spacecraft main processor (MP). This is in addition to on-chip binning as described by MESS:FPU_BIN.

0 - no further binning
2 - 2x2 binning
4 - 4x4 binning
8 - 8x8 binning.

MESS:SUBFRAME
Number of rectangular subframes within an MDIS image to be retained after image compression by the MESSENGER spacecraft main processor (MP). Subframes may overlap each other, and are defined in the original 1024x1024 pixel MDIS coordinate system before pixel binning as described by MESS:FPU_BIN and MESS:PIXELBIN. Either a full image may be specified, or up to five discrete regions within the full image. In all cases, the first four columns of the original 1024x1024 image, which are physically masked and serve as a dark current reference, are downlinked as subframe 0, even if the full image case is described. Within the subframes, pixel binning as described by MESS:FPU_BIN and MESS:PIXELBIN is performed.

0 - no subframes (full image)
1 - 1 subframe
2 - 2 subframes
3 - 3 subframes
4 - 4 subframes
5 - 5 subframes.

MESS:SUBF_X1
The zero-based starting column of the FIRST rectangular subframe within an MDIS image to be retained after image compression by the MESSENGER spacecraft main processor (MP). There may be up to five subframes per image as defined by MESS:SUBFRAME. Subframes are defined in the original 1024x1024 pixel MDIS coordinate system before pixel binning as described by MESS:FPU_BIN and MESS:PIXELBIN.

MESS:SUBF_Y1
The zero-based starting row of the FIRST rectangular subframe within an MDIS image to be retained after image compression by the MESSENGER spacecraft main

processor (MP). There may be up to five subframes per image as defined by MESS:SUBFRAME. Subframes are defined in the original 1024x1024 pixel MDIS coordinate system before pixel binning as described by MESS:FPU_BIN and MESS:PIXELBIN.

MESS:SUBF_DX1
The number of columns in the FIRST rectangular subframe within an MDIS image to be retained after image compression by the MESSENGER spacecraft main processor (MP). There may be up to five subframes per image as defined by MESS:SUBFRAME. Subframes are defined in the original 1024x1024 pixel MDIS coordinate system before pixel binning as described by MESS:FPU_BIN and MESS:PIXELBIN.

MESS:SUBF_DY1
The number of rows in the FIRST rectangular subframe within an MDIS image to be retained after image compression by the MESSENGER spacecraft main processor (MP). There may be up to five subframes per image as defined by MESS:SUBFRAME. Subframes are defined in the original 1024x1024 pixel MDIS coordinate system before pixel binning as described by MESS:FPU_BIN and MESS:PIXELBIN.

MESS:SUBF_X2
The zero-based starting column of the SECOND rectangular subframe within an MDIS image to be retained after image compression by the MESSENGER spacecraft main processor (MP). There may be up to five subframes per image as defined by MESS:SUBFRAME. Subframes are defined in the original 1024x1024 pixel MDIS coordinate system before pixel binning as described by MESS:FPU_BIN and MESS:PIXELBIN.

MESS:SUBF_Y2
The zero-based starting row of the SECOND rectangular subframe within an MDIS image to be retained after image compression by the MESSENGER spacecraft main processor (MP). There may be up to five subframes per image as defined by MESS:SUBFRAME. Subframes are defined in the original 1024x1024 pixel MDIS coordinate system before pixel binning as described by MESS:FPU_BIN and MESS:PIXELBIN.

MESS:SUBF_DX2
The number of columns in the SECOND rectangular subframe within an MDIS image to be retained after image compression by the MESSENGER spacecraft main processor (MP). There may be up to five subframes per image as defined by MESS:SUBFRAME. Subframes are defined in the original 1024x1024 pixel MDIS coordinate system before pixel binning as described by MESS:FPU_BIN and MESS:PIXELBIN.

MESS:SUBF_DY2
The number of rows in the SECOND rectangular subframe within an MDIS image to be retained after image compression by the MESSENGER spacecraft main processor (MP). There may be up to five subframes per image as defined by MESS:SUBFRAME. Subframes are defined in the original 1024x1024 pixel MDIS coordinate system before pixel binning as described by MESS:FPU_BIN and MESS:PIXELBIN.

MESS:SUBF_X3
The zero-based starting column of the THIRD rectangular subframe within an MDIS image to be retained after image compression by the MESSENGER spacecraft

main processor (MP). There may be up to five subframes per image as defined by MESS:SUBFRAME. Subframes are defined in the original 1024x1024 pixel MDIS coordinate system before pixel binning as described by MESS:FPU_BIN and MESS:PIXELBIN.

MESS:SUBF_Y3
The zero-based starting row of the THIRD rectangular subframe within an MDIS image to be retained after image compression by the MESSENGER spacecraft main processor (MP). There may be up to five subframes per image as defined by MESS:SUBFRAME. Subframes are defined in the original 1024x1024 pixel MDIS coordinate system before pixel binning as described by MESS:FPU_BIN and MESS:PIXELBIN.

MESS:SUBF_DX3
The number of columns in the THIRD rectangular subframe within an MDIS image to be retained after image compression by the MESSENGER spacecraft main processor (MP). There may be up to five subframes per image as defined by MESS:SUBFRAME. Subframes are defined in the original 1024x1024 pixel MDIS coordinate system before pixel binning as described by MESS:FPU_BIN and MESS:PIXELBIN.

MESS:SUBF_DY3
The number of rows in the THIRD rectangular subframe within an MDIS image to be retained after image compression by the MESSENGER spacecraft main processor (MP). There may be up to five subframes per image as defined by MESS:SUBFRAME. Subframes are defined in the original 1024x1024 pixel MDIS coordinate system before pixel binning as described by MESS:FPU_BIN and MESS:PIXELBIN.

MESS:SUBF_X4
The zero-based starting column of the FOURTH rectangular subframe within an MDIS image to be retained after image compression by the MESSENGER spacecraft main processor (MP). There may be up to five subframes per image as defined by MESS:SUBFRAME. Subframes are defined in the original 1024x1024 pixel MDIS coordinate system before pixel binning as described by MESS:FPU_BIN and MESS:PIXELBIN.

MESS:SUBF_Y4
The zero-based starting row of the FOURTH rectangular subframe within an MDIS image to be retained after image compression by the MESSENGER spacecraft main processor (MP). There may be up to five subframes per image as defined by MESS:SUBFRAME. Subframes are defined in the original 1024x1024 pixel MDIS coordinate system before pixel binning as described by MESS:FPU_BIN and MESS:PIXELBIN.

MESS:SUBF_DX4
The number of columns in the FOURTH rectangular subframe within an MDIS image to be retained after image compression by the MESSENGER spacecraft main processor (MP). There may be up to five subframes per image as defined by MESS:SUBFRAME. Subframes are defined in the original 1024x1024 pixel MDIS coordinate system before pixel binning as described by MESS:FPU_BIN and MESS:PIXELBIN.

MESS:SUBF_DY4
The number of rows in the FOURTH rectangular subframe within an MDIS image to be retained after image compression by the MESSENGER spacecraft main

processor (MP). There may be up to five subframes per image as defined by MESS:SUBFRAME. Subframes are defined in the original 1024x1024 pixel MDIS coordinate system before pixel binning as described by MESS:FPU_BIN and MESS:PIXELBIN.

MESS:SUBF_X5
The zero-based starting column of the FIFTH rectangular subframe within an MDIS image to be retained after image compression by the MESSENGER spacecraft main processor (MP). There may be up to five subframes per image as defined by MESS:SUBFRAME. Subframes are defined in the original 1024x1024 pixel MDIS coordinate system before pixel binning as described by MESS:FPU_BIN and MESS:PIXELBIN.

MESS:SUBF_Y5
The zero-based starting row of the FIFTH rectangular subframe within an MDIS image to be retained after image compression by the MESSENGER spacecraft main processor (MP). There may be up to five subframes per image as defined by MESS:SUBFRAME. Subframes are defined in the original 1024x1024 pixel MDIS coordinate system before pixel binning as described by MESS:FPU_BIN and MESS:PIXELBIN.

MESS:SUBF_DX5
The number of columns in the FIFTH rectangular subframe within an MDIS image to be retained after image compression by the MESSENGER spacecraft main processor (MP). There may be up to five subframes per image as defined by MESS:SUBFRAME. Subframes are defined in the original 1024x1024 pixel MDIS coordinate system before pixel binning as described by MESS:FPU_BIN and MESS:PIXELBIN.

MESS:SUBF_DY5
The number of rows in the FIFTH rectangular subframe within an MDIS image to be retained after image compression by the MESSENGER spacecraft main processor (MP). There may be up to five subframes per image as defined by MESS:SUBFRAME. Subframes are defined in the original 1024x1024 pixel MDIS coordinate system before pixel binning as described by MESS:FPU_BIN and MESS:PIXELBIN.

MESS:CRITOPNV
When true, this indicates that the MDIS image is a critical optical navigation image and will be compressed by the MESSENGER Main Processor (MP) before other images. Normally, the MP compresses images in the order that they are received.

0 = False
1 = True.

MESS:JAILBARS
When true, this indicates that an MDIS image is subsampled by jailbars, a subset of all the image columns that are downlinked to save data volume in optical navigation images. The start column, stop column, and column spacing are indicated by MESS:JB_X0, MESS:JB_X1, and MESS:JB_SPACE respectively. Jailbars are defined in the original 1024x1024 pixel MDIS coordinate system before pixel binning as described by MESS:FPU_BIN and MESS:PIXELBIN.

MESS:JB_X0

The start column for jailbars in an MDIS image, a subset of all the image columns that are downlinked to save data volume in optical navigation images. Jailbars are defined in the original 1024x1024 pixel MDIS coordinate system before pixel binning as described by MESS:FPU_BIN and MESS:PIXELBIN.

MESS:JB_X1
The stop column for jailbars in an MDIS image, a subset of all the image columns that are downlinked to save data volume in optical navigation images. Jailbars are defined in the original 1024x1024 pixel MDIS coordinate system before pixel binning as described by MESS:FPU_BIN and MESS:PIXELBIN.

MESS:JB_SPACE
The column spacing for jailbars in an MDIS image, a subset of all the image columns that are downlinked to save data volume in optical navigation images. Jailbars are defined in the original 1024x1024 pixel MDIS coordinate system before pixel binning as described by MESS:FPU_BIN and MESS:PIXELBIN.

APPENDIX C. CDR LABEL

```
PDS_VERSION_ID       = PDS3

/*** FILE FORMAT ***/
RECORD_TYPE          = FIXED_LENGTH
RECORD_BYTES         = 4096
FILE_RECORDS         = 1028
LABEL_RECORDS        = 9999
LABEL_REVISION_NOTE  = "2007-12-20, S. Murchie (JHU/APL);
                        2008-01-02, S. Murchie (JHU/APL);
                        2008-01-11, J. Ward (GEO)"

/*** POINTERS TO START BYTE OFFSET OF OBJECTS IN IMAGE FILE ***/
^IMAGE               = 5

/*** GENERAL DATA DESCRIPTION PARAMETERS ***/
MISSION_NAME         = "MESSENGER"
SPACECRAFT_NAME      = "MESSENGER"
INSTRUMENT_HOST_NAME = "MESSENGER"
DATA_SET_ID          = "MESS-E/V/H-MDIS-4-CDR-CALDATA-V1.0"
DATA_QUALITY_ID      = "0000001000000000"
PRODUCT_ID           = "CW0089570568G_RA_0"
/* pcnnnnnnnnnnf_tt_v                    */
/* p = product type (C calibrated        */
/*     or D derived)                     */
/* c = camera (W WAC or N NAC)           */
/* nnnnnnnnnn = Mission Elapsed Time     */
/* f = filter                            */
/* tt = data type (RA radiance, IF I/F,  */
/*   or DE derived products)             */
/* v = version number                    */
SOURCE_PRODUCT_ID = {"EW0089570568G", "MDISWAC_NOTBIN_DARKMODEL_0",
  "MDISWAC_NOTBIN_FLAT_FILT_07_2", "MDISWAC_NOTBIN_RESP_1"}
PRODUCER_INSTITUTION_NAME = "APPLIED COHERENT TECHNOLOGY CORPORATION"
SOFTWARE_NAME        = "mdiscal"
SOFTWARE_VERSION_ID  = 1.0
MISSION_PHASE_NAME   = "VENUS 2 FLYBY"
TARGET_NAME          = "VENUS"
SEQUENCE_TITLE       = "07156_APP_WAC_MOSAIC_1"

/*** TIME PARAMETERS ***/
START_TIME           = 2007-06-05T22:40:41.702888
STOP_TIME            = 2007-06-05T22:40:41.768887
SPACECRAFT_CLOCK_START_COUNT = "1/0089570568:924000"
SPACECRAFT_CLOCK_STOP_COUNT = "1/0089570568:990000"
PRODUCT_CREATION_TIME = 2007-11-13T23:30:37

/*** INSTRUMENT ENGINEERING PARAMETERS ***/
INSTRUMENT_NAME      = "MERCURY DUAL IMAGING SYSTEM WIDE ANGLE CAMERA"
INSTRUMENT_ID        = "MDIS-WAC"
FILTER_NAME          = "750 BP 5"
FILTER_NUMBER        = 7
CENTER_FILTER_WAVELENGTH = 750 <NM>
BANDWIDTH            = 5 <NM>
```

```
EXPOSURE_DURATION    = 66 <MS>
EXPOSURE_TYPE        = AUTO
DETECTOR_TEMPERATURE = -39.86  <degC>
FOCAL_PLANE_TEMPERATURE = -20.19  <degC>
FILTER_TEMPERATURE   = -20.66  <degC>
OPTICS_TEMPERATURE   = "N/A"

/*** INSTRUMENT RAW PARAMETERS ***/
MESS:MET_EXP         = 89570568
MESS:ATT_CLOCK_COUNT = 89570566
MESS:ATT_Q1          = 0.635328
MESS:ATT_Q2          = -0.259454
MESS:ATT_Q3          = -0.630866
MESS:ATT_Q4          = -0.362009
MESS:ATT_FLAG        = 7
MESS:PIV_GOAL        = 9008
MESS:PIV_POS         = 9007
MESS:PIV_READ        = 14244
MESS:PIV_CAL         = -26758
MESS:FW_GOAL         = 50148
MESS:FW_POS          = 50132
MESS:FW_READ         = 50132
MESS:CCD_TEMP        = 1025
MESS:CAM_T1          = 484
MESS:CAM_T2          = 490
MESS:EXPOSURE        = 66
MESS:DPU_ID          = 0
MESS:IMAGER          = 0
MESS:SOURCE          = 0
MESS:FPU_BIN         = 0
MESS:COMP12_8        = 0
MESS:COMP_ALG        = 2
MESS:COMP_FST        = 1
MESS:TIME_PLS        = 2
MESS:LATCH_UP        = 0
MESS:EXP_MODE        = 1
MESS:PIV_STAT        = 1
MESS:PIV_MPEN        = 1
MESS:PIV_PV          = 1
MESS:PIV_RV          = 1
MESS:FW_PV           = 1
MESS:FW_RV           = 1
MESS:AEX_STAT        = 640
MESS:AEX_STHR        = 5
MESS:AEX_TGTB        = 2800
MESS:AEX_BACB        = 240
MESS:AEX_MAXE        = 100
MESS:AEX_MINE        = 1
MESS:DLNKPRIO        = 4
MESS:WVLRATIO        = 4
MESS:PIXELBIN        = 0
MESS:SUBFRAME        = 0
MESS:SUBF_X1         = 4
MESS:SUBF_Y1         = 0
MESS:SUBF_DX1        = 0
MESS:SUBF_DY1        = 0
MESS:SUBF_X2         = 4
```

```
MESS:SUBF_Y2          = 0
MESS:SUBF_DX2         = 0
MESS:SUBF_DY2         = 0
MESS:SUBF_X3          = 0
MESS:SUBF_Y3          = 0
MESS:SUBF_DX3         = 0
MESS:SUBF_DY3         = 0
MESS:SUBF_X4          = 0
MESS:SUBF_Y4          = 0
MESS:SUBF_DX4         = 0
MESS:SUBF_DY4         = 0
MESS:SUBF_X5          = 0
MESS:SUBF_Y5          = 0
MESS:SUBF_DX5         = 0
MESS:SUBF_DY5         = 0
MESS:CRITOPNV         = 0
MESS:JAILBARS         = 0
MESS:JB_X0            = 0
MESS:JB_X1            = 0
MESS:JB_SPACE         = 0

/*** GEOMETRY INFORMATION ***/
RIGHT_ASCENSION       = 176.87216 <DEG>
DECLINATION           = -3.69716 <DEG>
TWIST_ANGLE           = 171.97896 <DEG>
RA_DEC_REF_PIXEL      = (512.00000,512.00000)
RETICLE_POINT_RA = (182.77358 <DEG>,172.41885 <DEG>,181.37369 <DEG>,
  170.89950 <DEG>)
RETICLE_POINT_DECLINATION = (0.76231 <DEG>,2.21637 <DEG>,-9.59692 <DEG>,
  -8.12579 <DEG>)

/*** TARGET PARAMETERS ***/
SC_TARGET_POSITION_VECTOR = (18408.66793 <KM>,-4290.87625 <KM>,
  3173.25955 <KM>)
TARGET_CENTER_DISTANCE = 19166.64420 <KM>

/*** TARGET WITHIN SENSOR FOV ***/
SLANT_DISTANCE        = 14090.89871 <KM>
CENTER_LATITUDE       = 35.73941 <DEG>
CENTER_LONGITUDE      = 226.54464 <DEG>
HORIZONTAL_PIXEL_SCALE = 2530.43332 <M>
VERTICAL_PIXEL_SCALE = 2530.43332 <M>
SMEAR_MAGNITUDE       = 10.38328 <PIXELS>
SMEAR_AZIMUTH         = 272.50295 <DEG>
NORTH_AZIMUTH         = 272.56310 <DEG>
RETICLE_POINT_LATITUDE = ("N/A",47.22207 <DEG>,24.61941 <DEG>,
  20.95210 <DEG>)
RETICLE_POINT_LONGITUDE = ("N/A",244.79392 <DEG>,208.68936 <DEG>,
  239.57209 <DEG>)

/*** SPACECRAFT POSITION WITH RESPECT TO CENTRAL BODY ***/
SUB_SPACECRAFT_LATITUDE = 14.91164 <DEG>
SUB_SPACECRAFT_LONGITUDE = 246.92915 <DEG>
SPACECRAFT_ALTITUDE = 13114.84420 <KM>
SUB_SPACECRAFT_AZIMUTH = 38.96248 <DEG>

/*** SPACECRAFT LOCATION ***/
```

```
SPACECRAFT_SOLAR_DISTANCE = 108026224.29985 <KM>
SC_SUN_POSITION_VECTOR = (-94861341.41580 <KM>,-49114033.01048 <KM>,
  -16087349.15147 <KM>)
SC_SUN_VELOCITY_VECTOR = (-6.96273 <KM/S>,29.34676 <KM/S>,
  17.78406 <KM/S>)

/*** VIEWING AND LIGHTING GEOMETRY (SUN ON TARGET) ***/
SOLAR_DISTANCE       = 108040911.97274 <KM>
SUB_SOLAR_AZIMUTH    = 11.49240 <DEG>
SUB_SOLAR_LATITUDE   = -1.29302 <DEG>
SUB_SOLAR_LONGITUDE  = 283.86863 <DEG>
INCIDENCE_ANGLE      = 64.85698 <DEG>
PHASE_ANGLE          = 30.69683 <DEG>
EMISSION_ANGLE       = 39.19187 <DEG>
LOCAL_HOUR_ANGLE     = 122.67601 <DEG>

/*** GEOMETRY FOR EACH SUBFRAME ***/
GROUP = SUBFRAME1_PARAMETERS
  RETICLE_POINT_LATITUDE = ("N/A","N/A","N/A","N/A")
  RETICLE_POINT_LONGITUDE = ("N/A","N/A","N/A","N/A")
END_GROUP = SUBFRAME1_PARAMETERS

GROUP = SUBFRAME2_PARAMETERS
  RETICLE_POINT_LATITUDE = ("N/A","N/A","N/A","N/A")
  RETICLE_POINT_LONGITUDE = ("N/A","N/A","N/A","N/A")
END_GROUP = SUBFRAME2_PARAMETERS

GROUP = SUBFRAME3_PARAMETERS
  RETICLE_POINT_LATITUDE = ("N/A","N/A","N/A","N/A")
  RETICLE_POINT_LONGITUDE = ("N/A","N/A","N/A","N/A")
END_GROUP = SUBFRAME3_PARAMETERS

GROUP = SUBFRAME4_PARAMETERS
  RETICLE_POINT_LATITUDE = ("N/A","N/A","N/A","N/A")
  RETICLE_POINT_LONGITUDE = ("N/A","N/A","N/A","N/A")
END_GROUP = SUBFRAME4_PARAMETERS

GROUP = SUBFRAME5_PARAMETERS
  RETICLE_POINT_LATITUDE = ("N/A","N/A","N/A","N/A")
  RETICLE_POINT_LONGITUDE = ("N/A","N/A","N/A","N/A")
END_GROUP = SUBFRAME5_PARAMETERS

OBJECT = IMAGE
  LINES        = 1024
  LINE_SAMPLES = 1024
  SAMPLE_TYPE  = PC_REAL
  SAMPLE_BITS  = 32
  UNIT = "W / (m**2 micrometer sr)"
END_OBJECT = IMAGE
END
```

APPENDIX D. DDR LABEL

```
PDS_VERSION_ID       = PDS3

/*** FILE FORMAT ***/
RECORD_TYPE          = FIXED_LENGTH
RECORD_BYTES         = 4096
FILE_RECORDS         = 1028
LABEL_RECORDS        = 9999
LABEL_REVISION_NOTE  = "2007-12-20, S. Murchie (JHU/APL);
                        2008-01-02, S. Murchie (JHU/APL);
                        2008-01-11, J. Ward (GEO)"

/*** POINTERS TO START BYTE OFFSET OF OBJECTS IN IMAGE FILE ***/
^IMAGE               = 5

/*** GENERAL DATA DESCRIPTION PARAMETERS ***/
MISSION_NAME         = "MESSENGER"
SPACECRAFT_NAME      = "MESSENGER"
INSTRUMENT_HOST_NAME = "MESSENGER"
DATA_SET_ID          = "MESS-E/V/H-MDIS-6-DDR-GEOMDATA-V1.0"
DATA_QUALITY_ID      = "0000001000000000"
PRODUCT_ID           = "DW0089570568G_DE_0"
/* pcnnnnnnnnnnf_tt_v                    */
/* p = product type (C calibrated        */
/*     or D derived)                     */
/* c = camera (W WAC or N NAC)           */
/* nnnnnnnnnn = Mission Elapsed Time     */
/* f = filter                            */
/* tt = data type (RA radiance, IF I/F,  */
/*   or DE derived products)             */
/* v = version number                    */
SOURCE_PRODUCT_ID = {"msgr_20040803_20120401_od104sc.bsp",
  "msgr_v090.tf", "0096448075_mdis_atthist.bc", "msgr20070926.bc",
  "0001425715_0100421016_mdis_pivot.bc", "de405.bsp", "pck00008.tpc",
  "pck00008_MSGR.tpc", "mdisAddendum003.ti", "naif0008.tls",
  "messenger_403.tsc"}
PRODUCER_INSTITUTION_NAME = "APPLIED COHERENT TECHNOLOGY CORPORATION"
SOFTWARE_NAME        = "mdisddr"
SOFTWARE_VERSION_ID  = 1.0
MISSION_PHASE_NAME   = "VENUS 2 FLYBY"
TARGET_NAME          = "VENUS"
SEQUENCE_TITLE       = "07156_APP_WAC_MOSAIC_1"

/*** TIME PARAMETERS ***/
START_TIME           = 2007-06-05T22:40:41.702888
STOP_TIME            = 2007-06-05T22:40:41.768887
SPACECRAFT_CLOCK_START_COUNT = "1/0089570568:924000"
SPACECRAFT_CLOCK_STOP_COUNT = "1/0089570568:990000"
PRODUCT_CREATION_TIME = 2007-11-13T23:30:37

/*** INSTRUMENT ENGINEERING PARAMETERS ***/
INSTRUMENT_NAME      = "MERCURY DUAL IMAGING SYSTEM WIDE ANGLE CAMERA"
INSTRUMENT_ID        = "MDIS-WAC"
FILTER_NAME          = "750 BP 5"
```

```
FILTER_NUMBER        = 7
CENTER_FILTER_WAVELENGTH = 750 <NM>
BANDWIDTH            = 5 <NM>
EXPOSURE_DURATION    = 66 <MS>
EXPOSURE_TYPE        = AUTO
DETECTOR_TEMPERATURE = -39.86  <degC>
FOCAL_PLANE_TEMPERATURE = -20.19  <degC>
FILTER_TEMPERATURE   = -20.66  <degC>
OPTICS_TEMPERATURE   = "N/A"

/*** INSTRUMENT RAW PARAMETERS ***/
MESS:MET_EXP         = 89570568
MESS:ATT_CLOCK_COUNT = 89570566
MESS:ATT_Q1          = 0.635328
MESS:ATT_Q2          = -0.259454
MESS:ATT_Q3          = -0.630866
MESS:ATT_Q4          = -0.362009
MESS:ATT_FLAG        = 7
MESS:PIV_GOAL        = 9008
MESS:PIV_POS         = 9007
MESS:PIV_READ        = 14244
MESS:PIV_CAL         = -26758
MESS:FW_GOAL         = 50148
MESS:FW_POS          = 50132
MESS:FW_READ         = 50132
MESS:CCD_TEMP        = 1025
MESS:CAM_T1          = 484
MESS:CAM_T2          = 490
MESS:EXPOSURE        = 66
MESS:DPU_ID          = 0
MESS:IMAGER          = 0
MESS:SOURCE          = 0
MESS:FPU_BIN         = 0
MESS:COMP12_8        = 0
MESS:COMP_ALG        = 2
MESS:COMP_FST        = 1
MESS:TIME_PLS        = 2
MESS:LATCH_UP        = 0
MESS:EXP_MODE        = 1
MESS:PIV_STAT        = 1
MESS:PIV_MPEN        = 1
MESS:PIV_PV          = 1
MESS:PIV_RV          = 1
MESS:FW_PV           = 1
MESS:FW_RV           = 1
MESS:AEX_STAT        = 640
MESS:AEX_STHR        = 5
MESS:AEX_TGTB        = 2800
MESS:AEX_BACB        = 240
MESS:AEX_MAXE        = 100
MESS:AEX_MINE        = 1
MESS:DLNKPRIO        = 4
MESS:WVLRATIO        = 4
MESS:PIXELBIN        = 0
MESS:SUBFRAME        = 0
MESS:SUBF_X1         = 4
MESS:SUBF_Y1         = 0
```

```
MESS:SUBF_DX1        = 0
MESS:SUBF_DY1        = 0
MESS:SUBF_X2         = 4
MESS:SUBF_Y2         = 0
MESS:SUBF_DX2        = 0
MESS:SUBF_DY2        = 0
MESS:SUBF_X3         = 0
MESS:SUBF_Y3         = 0
MESS:SUBF_DX3        = 0
MESS:SUBF_DY3        = 0
MESS:SUBF_X4         = 0
MESS:SUBF_Y4         = 0
MESS:SUBF_DX4        = 0
MESS:SUBF_DY4        = 0
MESS:SUBF_X5         = 0
MESS:SUBF_Y5         = 0
MESS:SUBF_DX5        = 0
MESS:SUBF_DY5        = 0
MESS:CRITOPNV        = 0
MESS:JAILBARS        = 0
MESS:JB_X0           = 0
MESS:JB_X1           = 0
MESS:JB_SPACE        = 0

/*** GEOMETRY INFORMATION ***/
RIGHT_ASCENSION      = 176.87216 <DEG>
DECLINATION          = -3.69716 <DEG>
TWIST_ANGLE          = 171.97896 <DEG>
RA_DEC_REF_PIXEL     = (512.00000,512.00000)
RETICLE_POINT_RA = (182.77358 <DEG>,172.41885 <DEG>,181.37369 <DEG>,
  170.89950 <DEG>)
RETICLE_POINT_DECLINATION = (0.76231 <DEG>,2.21637 <DEG>,
  -9.59692 <DEG>,-8.12579 <DEG>)

/*** TARGET PARAMETERS ***/
SC_TARGET_POSITION_VECTOR = (18408.66793 <KM>,-4290.87625 <KM>,
  3173.25955 <KM>)
TARGET_CENTER_DISTANCE = 19166.64420 <KM>

/*** TARGET WITHIN SENSOR FOV ***/
SLANT_DISTANCE       = 14090.89871 <KM>
CENTER_LATITUDE      = 35.73941 <DEG>
CENTER_LONGITUDE     = 226.54464 <DEG>
HORIZONTAL_PIXEL_SCALE = 2530.43332 <M>
VERTICAL_PIXEL_SCALE = 2530.43332 <M>
SMEAR_MAGNITUDE      = 10.38328 <PIXELS>
SMEAR_AZIMUTH        = 272.50295 <DEG>
NORTH_AZIMUTH        = 272.56310 <DEG>
RETICLE_POINT_LATITUDE = ("N/A",47.22207 <DEG>,24.61941 <DEG>,
  20.95210 <DEG>)
RETICLE_POINT_LONGITUDE = ("N/A",244.79392 <DEG>,208.68936 <DEG>,
  239.57209 <DEG>)

/*** SPACECRAFT POSITION WITH RESPECT TO CENTRAL BODY ***/
SUB_SPACECRAFT_LATITUDE = 14.91164 <DEG>
SUB_SPACECRAFT_LONGITUDE = 246.92915 <DEG>
SPACECRAFT_ALTITUDE = 13114.84420 <KM>
```

```
SUB_SPACECRAFT_AZIMUTH = 38.96248 <DEG>

/*** SPACECRAFT LOCATION ***/
SPACECRAFT_SOLAR_DISTANCE = 108026224.29985 <KM>
SC_SUN_POSITION_VECTOR = (-94861341.41580 <KM>,-49114033.01048 <KM>,
  -16087349.15147 <KM>)
SC_SUN_VELOCITY_VECTOR = (-6.96273 <KM/S>,29.34676 <KM/S>,
  17.78406 <KM/S>)

/*** VIEWING AND LIGHTING GEOMETRY (SUN ON TARGET) ***/
SOLAR_DISTANCE       = 108040911.97274 <KM>
SUB_SOLAR_AZIMUTH    = 11.49240 <DEG>
SUB_SOLAR_LATITUDE   = -1.29302 <DEG>
SUB_SOLAR_LONGITUDE  = 283.86863 <DEG>
INCIDENCE_ANGLE      = 64.85698 <DEG>
PHASE_ANGLE          = 30.69683 <DEG>
EMISSION_ANGLE       = 39.19187 <DEG>
LOCAL_HOUR_ANGLE     = 122.67601 <DEG>

/*** GEOMETRY FOR EACH SUBFRAME ***/
GROUP = SUBFRAME1_PARAMETERS
  RETICLE_POINT_LATITUDE = ("N/A","N/A","N/A","N/A")
  RETICLE_POINT_LONGITUDE = ("N/A","N/A","N/A","N/A")
END_GROUP = SUBFRAME1_PARAMETERS

GROUP = SUBFRAME2_PARAMETERS
  RETICLE_POINT_LATITUDE = ("N/A","N/A","N/A","N/A")
  RETICLE_POINT_LONGITUDE = ("N/A","N/A","N/A","N/A")
END_GROUP = SUBFRAME2_PARAMETERS

GROUP = SUBFRAME3_PARAMETERS
  RETICLE_POINT_LATITUDE = ("N/A","N/A","N/A","N/A")
  RETICLE_POINT_LONGITUDE = ("N/A","N/A","N/A","N/A")
END_GROUP = SUBFRAME3_PARAMETERS

GROUP = SUBFRAME4_PARAMETERS
  RETICLE_POINT_LATITUDE = ("N/A","N/A","N/A","N/A")
  RETICLE_POINT_LONGITUDE = ("N/A","N/A","N/A","N/A")
END_GROUP = SUBFRAME4_PARAMETERS

GROUP = SUBFRAME5_PARAMETERS
  RETICLE_POINT_LATITUDE = ("N/A","N/A","N/A","N/A")
  RETICLE_POINT_LONGITUDE = ("N/A","N/A","N/A","N/A")
END_GROUP = SUBFRAME5_PARAMETERS

OBJECT = IMAGE
  LINES        = 1024
  LINE_SAMPLES = 1024
  SAMPLE_TYPE  = PC_REAL
  SAMPLE_BITS  = 32
  BANDS        = 5
  BAND_STORAGE_TYPE = BAND_SEQUENTIAL
  BAND_NAME    = ("Latitude, planetocentric, deg N",
                  "Longitude, planetocentric, deg E",
                  "Incidence angle at equipotential surface, deg",
                  "Emission angle at equipotential surface, deg",
                  "Phase angle at equipotential surface, deg")
```

```
END_OBJECT = IMAGE
END
```

APPENDIX E1. BDR LABEL (I/F IMAGE)

```
PDS_VERSION_ID          = PDS3
RECORD_TYPE             = FIXED_LENGTH
RECORD_BYTES            = 36864
FILE_RECORDS            = 12800
LABEL_REVISION_NOTE     = "2007-12-20, S. Murchie (JHU/APL);
                           2008-01-02, S. Murchie (JHU/APL);
                           2008-01-11, J. Ward (GEO)"

^IMAGE                  = "BDRIF_25N000_0256_0.IMG"

/* Map-projected Basemap RDR Identification */

DATA_SET_ID             = "MESS-E/V/H-MDIS-5-BDR-V1.0"
PRODUCT_ID              = "BDRIF_25N000_0256_0"
                       /*(BDRss_yydxxx_rrrr_v                        )*/
                       /*(ss = subtype of image product, IF for I/F, )*/
                       /*(     AL for photometrically corrected      )*/
                       /*(     I/F, DE for derived                   )*/
                       /*(yy = latitude of upper left corner         )*/
                       /*(d = N or S for north or south latitude     )*/
                       /*(xxx = east longitude of upper left corner  )*/
                       /*(rrrr = resolution in pixels/degree         )*/
                       /*(v = version number                         )*/

MISSION_NAME            = "MESSENGER"
SPACECRAFT_NAME         = "MESSENGER"
INSTRUMENT_HOST_NAME    = "MESSENGER"
INSTRUMENT_NAME         = {"MERCURY DUAL IMAGING SYSTEM WIDE ANGLE
                            CAMERA",
                           "MERCURY DUAL IMAGING SYSTEM NARROW ANGLE
                            CAMERA"}
INSTRUMENT_ID                   = {"MDIS-WAC","MDIS-NAC"}
TARGET_NAME                     = MERCURY
PRODUCT_TYPE                    = MAP_PROJECTED_BASEMAP_RDR
PRODUCT_CREATION_TIME           = 2011-10-25T23:17:20.029
START_TIME                      = "NULL"
STOP_TIME                       = "NULL"
SPACECRAFT_CLOCK_START_COUNT    = "NULL"
SPACECRAFT_CLOCK_STOP_COUNT     = "NULL"
PRODUCT_VERSION_ID              = "1"
PRODUCER_INSTITUTION_NAME       = "APPLIED COHERENT TECHNOLOGY
                                   CORPORATION"
SOFTWARE_NAME                   = "PIPE_create_mdis_bdr_product"
SOFTWARE_VERSION_ID             = "10.16.07"

/* This Map Projected Basemap RDR label describes one data file:     */
/*   1. A multiple-band image file of calibrated RDR data in I/F     */
/* This RDR represents one latitude-longitude bin in a global map.   */
/* See the Map Projection Object below for bin coordinates and       */
/* resolution.                                                       */
/* See the MDIS CDR/RDR SIS for more detailed description.           */

/*Description of MAP PROJECTED MULTISPECTRAL RDR RADIANCE IMAGE file*/
```

```
OBJECT                          = IMAGE
  LINES                         = 6400
  LINE_SAMPLES                  = 9216
  SAMPLE_TYPE                   = PC_REAL
  SAMPLE_BITS                   = 32
  UNIT                          = "I over F"
  BANDS                         = 2
  BAND_STORAGE_TYPE             = BAND_SEQUENTIAL
  BAND_NAME                     = ("NAC",
                                   "WAC, filter 7, 750 BP 5")
  PHOTOMETRIC_CORRECTION_TYPE   = "NONE"
  USAGE_NOTE                    = "Up to 255 characters of description
                                   of photometric parameters if the
                                   subtype of product is AL"
END_OBJECT                      = IMAGE

/* Map projection information about this RDR is in the              */
/* IMAGE_MAP_PROJECTION object below.                               */

OBJECT                          = IMAGE_MAP_PROJECTION
  ^DATA_SET_MAP_PROJECTION      = "BDR_MAP.CAT"
  MAP_PROJECTION_TYPE           = "EQUIRECTANGULAR"
  A_AXIS_RADIUS                 = 2440.0 <KM>
  B_AXIS_RADIUS                 = 2440.0 <KM>
  C_AXIS_RADIUS                 = 2440.0 <KM>
  FIRST_STANDARD_PARALLEL       = "N/A"
  SECOND_STANDARD_PARALLEL      = "N/A"
  POSITIVE_LONGITUDE_DIRECTION = "EAST"
  CENTER_LATITUDE               = 0.0000000 <DEGREE>
  CENTER_LONGITUDE              = 0.000000  <DEGREE>
  REFERENCE_LATITUDE            = "N/A"
  REFERENCE_LONGITUDE           = "N/A"
  LINE_FIRST_PIXEL              = 1      /* North edge */
  LINE_LAST_PIXEL               = 6400   /* South edge */
  SAMPLE_FIRST_PIXEL            = 1      /* West edge */
  SAMPLE_LAST_PIXEL             = 9216   /* East edge */
  MAP_PROJECTION_ROTATION       = 0.0
  MAP_RESOLUTION                = 256 <PIXEL/DEGREE>
  MAP_SCALE                     = 0.16633124125 <KM/PIXEL>
  MAXIMUM_LATITUDE              =   25.0000000 <DEGREE>
  MINIMUM_LATITUDE              =    0.0000000 <DEGREE>
  WESTERNMOST_LONGITUDE         =    0.0000000 <DEGREE>
  EASTERNMOST_LONGITUDE         =   36.0000000 <DEGREE>
  LINE_PROJECTION_OFFSET        =    6400.000
  SAMPLE_PROJECTION_OFFSET      =       0.000
  COORDINATE_SYSTEM_TYPE        = "BODY-FIXED ROTATING"
  COORDINATE_SYSTEM_NAME        = "PLANETOCENTRIC"
END_OBJECT                      = IMAGE_MAP_PROJECTION

END
```

APPENDIX E2. BDR LABEL (DERIVED DATA IMAGE)

```
PDS_VERSION_ID          = PDS3
RECORD_TYPE             = FIXED_LENGTH
RECORD_BYTES            = 36864
FILE_RECORDS            = 64000
LABEL_REVISION_NOTE     = "2007-12-20, S. Murchie (JHU/APL);
                           2008-01-02, S. Murchie (JHU/APL);
                           2008-01-11, J. Ward (GEO)"

^IMAGE                  = "BDRDE_25N000_0256_0.IMG"

/* Map-projected Basemap RDR Identification */

DATA_SET_ID             = "MESS-E/V/H-MDIS-5-BDR-V1.0"
PRODUCT_ID              = "BDRDE_25N000_0256_0"
                       /*(BDRss_yydxxx_rrrr_v                        )*/
                       /*(ss = subtype of image product, IF for I/F, )*/
                       /*(     AL for photometrically corrected      )*/
                       /*(     I/F, DE for derived                   )*/
                       /*(yy = latitude of upper left corner         )*/
                       /*(d = N or S for north or south latitude     )*/
                       /*(xxx = east longitude of upper left corner  )*/
                       /*(rrrr = resolution in pixels/degree         )*/
                       /*(v = version number                         )*/

MISSION_NAME            = "MESSENGER"
SPACECRAFT_NAME         = "MESSENGER"
INSTRUMENT_HOST_NAME    = "MESSENGER"
INSTRUMENT_NAME         = {"MERCURY DUAL IMAGING SYSTEM WIDE ANGLE
                            CAMERA",
                           "MERCURY DUAL IMAGING SYSTEM NARROW ANGLE
                            CAMERA"}
INSTRUMENT_ID                  = {"MDIS-WAC","MDIS-NAC"}
TARGET_NAME                    = MERCURY
PRODUCT_TYPE                   = MAP_PROJECTED_BASEMAP_RDR
PRODUCT_CREATION_TIME          = 2011-10-25T23:17:20.029
START_TIME                     = "NULL"
STOP_TIME                      = "NULL"
SPACECRAFT_CLOCK_START_COUNT   = "NULL"
SPACECRAFT_CLOCK_STOP_COUNT    = "NULL"
PRODUCT_VERSION_ID             = "1"
PRODUCER_INSTITUTION_NAME      = "APPLIED COHERENT TECHNOLOGY
                                  CORPORATION"
SOFTWARE_NAME                  = "PIPE_create_mdis_bdr_product"
SOFTWARE_VERSION_ID            = "10.16.07"

/* This Map Projected Basemap RDR label describes one data file:     */
/*   1. A multiple-band image file of derived products               */
/* This RDR represents one latitude-longitude bin in a global map.   */
/* See the Map Projection Object below for bin coordinates and       */
/* resolution.                                                       */
/* See the MDIS CDR/RDR SIS for more detailed description.           */

/* Description of MAP PROJECTED MULTISPECTRAL RDR RADIANCE IMAGE file*/
```

```
OBJECT                          = IMAGE
  LINES                         = 6400
  LINE_SAMPLES                  = 9216
  SAMPLE_TYPE                   = PC_REAL
  SAMPLE_BITS                   = 32
  BANDS                         = 10
  BAND_STORAGE_TYPE             = BAND_SEQUENTIAL
  BAND_NAME                 = ("NAC, incidence angle, degrees",
                              "NAC, emission angle, degrees",
                              "NAC, phase angle, degrees",
                              "NAC, mission-elapsed time, sec",
                              "NAC, slant range, kilometers",
                              "WAC, filter 7, incidence angle, degrees",
                              "WAC, filter 7, emission angle, degrees",
                              "WAC, filter 7, phase angle, degrees",
                              "WAC, filter 7, mission-elapsed time, sec",
                              "WAC, filter 7, slant range, kilometers")
END_OBJECT                  = IMAGE

/* Map projection information about this RDR is in the               */
/* IMAGE_MAP_PROJECTION object below.                                */

OBJECT                          = IMAGE_MAP_PROJECTION
  ^DATA_SET_MAP_PROJECTION      = "BDR_MAP.CAT"
  MAP_PROJECTION_TYPE           = "EQUIRECTANGULAR"
  A_AXIS_RADIUS                 = 2440.0 <KM>
  B_AXIS_RADIUS                 = 2440.0 <KM>
  C_AXIS_RADIUS                 = 2440.0 <KM>
  FIRST_STANDARD_PARALLEL       = "N/A"
  SECOND_STANDARD_PARALLEL      = "N/A"
  POSITIVE_LONGITUDE_DIRECTION = "EAST"
  CENTER_LATITUDE               = 0.0000000 <DEGREE>
  CENTER_LONGITUDE              = 0.000000 <DEGREE>
  REFERENCE_LATITUDE            = "N/A"
  REFERENCE_LONGITUDE           = "N/A"
  LINE_FIRST_PIXEL              = 1      /* North edge */
  LINE_LAST_PIXEL               = 6400   /* South edge */
  SAMPLE_FIRST_PIXEL            = 1      /* West edge */
  SAMPLE_LAST_PIXEL             = 9216   /* East edge */
  MAP_PROJECTION_ROTATION       = 0.0
  MAP_RESOLUTION                = 256 <PIXEL/DEGREE>
  MAP_SCALE                     = 0.16633124125 <KM/PIXEL>
  MAXIMUM_LATITUDE              =   25.0000000 <DEGREE>
  MINIMUM_LATITUDE              =    0.0000000 <DEGREE>
  WESTERNMOST_LONGITUDE         =    0.0000000 <DEGREE>
  EASTERNMOST_LONGITUDE         =   36.0000000 <DEGREE>
  LINE_PROJECTION_OFFSET        =    6400.000
  SAMPLE_PROJECTION_OFFSET      =       0.000
  COORDINATE_SYSTEM_TYPE        = "BODY-FIXED ROTATING"
  COORDINATE_SYSTEM_NAME        = "PLANETOCENTRIC"
END_OBJECT                      = IMAGE_MAP_PROJECTION

END
```

APPENDIX F1. MDR LABEL (I/F IMAGE)

```
PDS_VERSION_ID          = PDS3
RECORD_TYPE             = FIXED_LENGTH
RECORD_BYTES            = 9216
FILE_RECORDS            = 17600
LABEL_REVISION_NOTE     = "2007-12-20, S. Murchie (JHU/APL);
                           2008-01-02, S. Murchie (JHU/APL);
                           2008-01-11, J. Ward (GEO)"

^IMAGE                  = "MDRIF_25N000_0064_0.IMG"

/* Map-projected Multispectral RDR Identification */

DATA_SET_ID             = "MESS-E/V/H-MDIS-5-MDR-V1.0"
PRODUCT_ID              = "MDRIF_25N000_0064_0"
                       /*(MDRss_yydxxx_rrrr_v                        )*/
                       /*(ss = subtype of image product, IF for I/F, )*/
                       /*(     AL for photometrically corrected      )*/
                       /*(     I/F, DE for derived                   )*/
                       /*(yy = latitude of upper left corner         )*/
                       /*(d = N or S for north or south latitude     )*/
                       /*(xxx = east longitude of upper left corner  )*/
                       /*(rrrr = resolution in pixels/degree         )*/
                       /*(v = version number                         )*/

MISSION_NAME            = "MESSENGER"
SPACECRAFT_NAME         = "MESSENGER"
INSTRUMENT_HOST_NAME    = "MESSENGER"
INSTRUMENT_NAME         = {"MERCURY DUAL IMAGING SYSTEM WIDE ANGLE
                            CAMERA",
                           "MERCURY DUAL IMAGING SYSTEM NARROW ANGLE
                            CAMERA"}
INSTRUMENT_ID                  = {"MDIS-WAC","MDIS-NAC"}
TARGET_NAME                    = MERCURY
PRODUCT_TYPE                   = MAP_PROJECTED_MULTISPECTRAL_RDR
PRODUCT_CREATION_TIME          = 2011-10-25T23:17:20.029
START_TIME                     = "NULL"
STOP_TIME                      = "NULL"
SPACECRAFT_CLOCK_START_COUNT   = "NULL"
SPACECRAFT_CLOCK_STOP_COUNT    = "NULL"
PRODUCT_VERSION_ID             = "1"
PRODUCER_INSTITUTION_NAME      = "APPLIED COHERENT TECHNOLOGY
                                  CORPORATION"
SOFTWARE_NAME                  = "PIPE_create_mdis_mdr_product"
SOFTWARE_VERSION_ID            = "10.16.07"

/*This Map Projected Multispectral RDR label describes one data file:*/
/*  1. A multiple-band image file of calibrated RDR data in I/F      */
/*This MDR represents one latitude-longitude bin in a global map.    */
/*See the Map Projection Object below for bin coordinates and        */
/*resolution.                                                        */
/*See the MDIS CDR/RDR SIS for more detailed description.            */

/* Description of MAP PROJECTED MULTISPECTRAL RDR RADIANCE IMAGE file*/
```

```
OBJECT                          = IMAGE
  LINES                         = 1600
  LINE_SAMPLES                  = 2304
  SAMPLE_TYPE                   = PC_REAL
  SAMPLE_BITS                   = 32
  UNIT                          = "I over F"
  BANDS                         = 11
  BAND_STORAGE_TYPE             = BAND_SEQUENTIAL
  BAND_NAME                     = ("WAC, filter 6, 430 BP 40",
                                   "WAC, filter 3, 480 BP 10",
                                   "WAC, filter 4, 560 BP 5",
                                   "WAC, filter 5, 630 BP 5",
                                   "WAC, filter 1, 700 BP 5",
                                   "WAC, filter 7, 750 BP 5",
                                   "WAC, filter 12, 830 BP 5",
                                   "WAC, filter 10, 900 BP 5",
                                   "WAC, filter 8, 950 BP 7",
                                   "WAC, filter 9, 1000 BP 15",
                                   "WAC, filter 11, 1020 BP 40")
  PHOTOMETRIC_CORRECTION_TYPE   = "NONE"
  USAGE_NOTE                    = "Up to 255 characters of description
                                   of photometric parameters if the
                                   subtype of product is AL"
END_OBJECT                      = IMAGE

/* Map projection information about this RDR is in the                */
/* IMAGE_MAP_PROJECTION object below.                                 */

OBJECT                          = IMAGE_MAP_PROJECTION
  ^DATA_SET_MAP_PROJECTION      = "MDR_MAP.CAT"
  MAP_PROJECTION_TYPE           = "EQUIRECTANGULAR"
  A_AXIS_RADIUS                 = 2440.0 <KM>
  B_AXIS_RADIUS                 = 2440.0 <KM>
  C_AXIS_RADIUS                 = 2440.0 <KM>
  FIRST_STANDARD_PARALLEL       = "N/A"
  SECOND_STANDARD_PARALLEL      = "N/A"
  POSITIVE_LONGITUDE_DIRECTION = "EAST"
  CENTER_LATITUDE               = 0.0000000 <DEGREE>
  CENTER_LONGITUDE              = 0.000000 <DEGREE>
  REFERENCE_LATITUDE            = "N/A"
  REFERENCE_LONGITUDE           = "N/A"
  LINE_FIRST_PIXEL              = 1      /* North edge */
  LINE_LAST_PIXEL               = 6400   /* South edge */
  SAMPLE_FIRST_PIXEL            = 1      /* West edge */
  SAMPLE_LAST_PIXEL             = 9216   /* East edge */
  MAP_PROJECTION_ROTATION       = 0.0
  MAP_RESOLUTION                = 64 <PIXEL/DEGREE>
  MAP_SCALE                     = 0.66532496501 <KM/PIXEL>
  MAXIMUM_LATITUDE              =   25.0000000 <DEGREE>
  MINIMUM_LATITUDE              =    0.0000000 <DEGREE>
  WESTERNMOST_LONGITUDE         =    0.0000000 <DEGREE>
  EASTERNMOST_LONGITUDE         =   36.0000000 <DEGREE>
  LINE_PROJECTION_OFFSET        =    1600.000
  SAMPLE_PROJECTION_OFFSET      =       0.000
  COORDINATE_SYSTEM_TYPE        = "BODY-FIXED ROTATING"
  COORDINATE_SYSTEM_NAME        = "PLANETOCENTRIC"
```

```
END_OBJECT                      = IMAGE_MAP_PROJECTION

END
```

APPENDIX F2. MDR LABEL (DERIVED DATA IMAGE)

```
PDS_VERSION_ID          = PDS3
RECORD_TYPE             = FIXED_LENGTH
RECORD_BYTES            = 9216
FILE_RECORDS            = 88000
LABEL_REVISION_NOTE     = "2007-12-20, S. Murchie (JHU/APL);
                           2008-01-02, S. Murchie (JHU/APL);
                           2008-01-10, S. Murchie (JHU/APL);
                           2008-01-11, J. Ward (GEO)"

^IMAGE                  = "MDRDE_25N000_0064_0.IMG"

/* Map-projected Multispectral RDR Identification */

DATA_SET_ID             = "MESS-E/V/H-MDIS-5-MDR-V1.0"
PRODUCT_ID              = "MDRDE_25N000_0064_0"
                       /*(MDRss_yydxxx_rrrr_v                        )*/
                       /*(ss = subtype of image product, IF for I/F, )*/
                       /*(     AL for photometrically corrected      )*/
                       /*(     I/F, DE for derived                   )*/
                       /*(yy = latitude of upper left corner         )*/
                       /*(d = N or S for north or south latitude     )*/
                       /*(xxx = east longitude of upper left corner  )*/
                       /*(rrrr = resolution in pixels/degree         )*/
                       /*(v = version number                         )*/

MISSION_NAME            = "MESSENGER"
SPACECRAFT_NAME         = "MESSENGER"
INSTRUMENT_HOST_NAME    = "MESSENGER"
INSTRUMENT_NAME         = {"MERCURY DUAL IMAGING SYSTEM WIDE ANGLE
                            CAMERA",
                           "MERCURY DUAL IMAGING SYSTEM NARROW ANGLE
                            CAMERA"}
INSTRUMENT_ID                   = {"MDIS-WAC","MDIS-NAC"}
TARGET_NAME                     = MERCURY
PRODUCT_TYPE                    = MAP_PROJECTED_MULTISPECTRAL_RDR
PRODUCT_CREATION_TIME           = 2011-10-25T23:17:20.029
START_TIME                      = "NULL"
STOP_TIME                       = "NULL"
SPACECRAFT_CLOCK_START_COUNT    = "NULL"
SPACECRAFT_CLOCK_STOP_COUNT     = "NULL"
PRODUCT_VERSION_ID              = "1"
PRODUCER_INSTITUTION_NAME       = "APPLIED COHERENT TECHNOLOGY
                                   CORPORATION"
SOFTWARE_NAME                   = "PIPE_create_mdis_mdr_product"
SOFTWARE_VERSION_ID             = "10.16.07"

/*This Map Projected Multispectral RDR label describes one data file:*/
/*  1. A multiple-band image file of derived products               */
/*This MDR represents one latitude-longitude bin in a global map.    */
/*See the Map Projection Object below for bin coordinates and        */
/*resolution.                                                        */
/*See the MDIS CDR/RDR SIS for more detailed description.            */
```

```
/* Description of MAP PROJECTED MULTISPECTRAL RDR RADIANCE IMAGE file*/

OBJECT                  = IMAGE
  LINES                 = 1600
  LINE_SAMPLES          = 2304
  SAMPLE_TYPE           = PC_REAL
  SAMPLE_BITS           = 32
  BANDS                 = 55
  BAND_STORAGE_TYPE     = BAND_SEQUENTIAL
  BAND_NAME             = ("WAC, filter 6, incidence angle, degrees",
                          "WAC, filter 6, emission angle, degrees",
                          "WAC, filter 6, phase angle, degrees",
                          "WAC, filter 6, mission-elapsed time, seconds",
                          "WAC, filter 6, slant range, kilometers",
                          "WAC, filter 3, incidence angle, degrees",
                          "WAC, filter 3, emission angle, degrees",
                          "WAC, filter 3, phase angle, degrees",
                          "WAC, filter 3, mission-elapsed time, seconds",
                          "WAC, filter 3, slant range, kilometers",
                          "WAC, filter 4, incidence angle, degrees",
                          "WAC, filter 4, emission angle, degrees",
                          "WAC, filter 4, phase angle, degrees",
                          "WAC, filter 4, mission-elapsed time, seconds",
                          "WAC, filter 4, slant range, kilometers",
                          "WAC, filter 5, incidence angle, degrees",
                          "WAC, filter 5, emission angle, degrees",
                          "WAC, filter 5, phase angle, degrees",
                          "WAC, filter 5, mission-elapsed time, seconds",
                          "WAC, filter 5, slant range, kilometers",
                          "WAC, filter 1, incidence angle, degrees",
                          "WAC, filter 1, emission angle, degrees",
                          "WAC, filter 1, phase angle, degrees",
                          "WAC, filter 1, mission-elapsed time, seconds",
                          "WAC, filter 1, slant range, kilometers",
                          "WAC, filter 7, incidence angle, degrees",
                          "WAC, filter 7, emission angle, degrees",
                          "WAC, filter 7, phase angle, degrees",
                          "WAC, filter 7, mission-elapsed time, seconds",
                          "WAC, filter 7, slant range, kilometers",
                          "WAC, filter 12, incidence angle, degrees",
                          "WAC, filter 12, emission angle, degrees",
                          "WAC, filter 12, phase angle, degrees",
                          "WAC, filter 12, mission-elapsed time, seconds",
                          "WAC, filter 12, slant range, kilometers",
                          "WAC, filter 10, incidence angle, degrees",
                          "WAC, filter 10, emission angle, degrees",
                          "WAC, filter 10, phase angle, degrees",
                          "WAC, filter 10, mission-elapsed time, seconds",
                          "WAC, filter 10, slant range, kilometers",
                          "WAC, filter 8, incidence angle, degrees",
                          "WAC, filter 8, emission angle, degrees",
                          "WAC, filter 8, phase angle, degrees",
                          "WAC, filter 8, mission-elapsed time, seconds",
                          "WAC, filter 8, slant range, kilometers",
                          "WAC, filter 9, incidence angle, degrees",
                          "WAC, filter 9, emission angle, degrees",
```

```
                         "WAC, filter 9, phase angle, degrees",
                         "WAC, filter 9, mission-elapsed time, seconds",
                         "WAC, filter 9, slant range, kilometers",
                         "WAC, filter 11, incidence angle, degrees",
                         "WAC, filter 11, emission angle, degrees",
                         "WAC, filter 11, phase angle, degrees",
                         "WAC, filter 11, mission-elapsed time, seconds",
                         "WAC, filter 11, slant range, kilometers")
END_OBJECT             = IMAGE

/* Map projection information about this RDR is in the               */
/* IMAGE_MAP_PROJECTION object below.                                */

OBJECT                         = IMAGE_MAP_PROJECTION
  ^DATA_SET_MAP_PROJECTION     = "MDR_MAP.CAT"
  MAP_PROJECTION_TYPE          = "EQUIRECTANGULAR"
  A_AXIS_RADIUS                = 2440.0 <KM>
  B_AXIS_RADIUS                = 2440.0 <KM>
  C_AXIS_RADIUS                = 2440.0 <KM>
  FIRST_STANDARD_PARALLEL      = "N/A"
  SECOND_STANDARD_PARALLEL     = "N/A"
  POSITIVE_LONGITUDE_DIRECTION = "EAST"
  CENTER_LATITUDE              = 0.0000000 <DEGREE>
  CENTER_LONGITUDE             = 0.000000  <DEGREE>
  REFERENCE_LATITUDE           = "N/A"
  REFERENCE_LONGITUDE          = "N/A"
  LINE_FIRST_PIXEL             = 1      /* North edge */
  LINE_LAST_PIXEL              = 6400   /* South edge */
  SAMPLE_FIRST_PIXEL           = 1      /* West edge */
  SAMPLE_LAST_PIXEL            = 9216   /* East edge */
  MAP_PROJECTION_ROTATION      = 0.0
  MAP_RESOLUTION               = 64 <PIXEL/DEGREE>
  MAP_SCALE                    = 0.66532496501 <KM/PIXEL>
  MAXIMUM_LATITUDE             =   25.0000000 <DEGREE>
  MINIMUM_LATITUDE             =    0.0000000 <DEGREE>
  WESTERNMOST_LONGITUDE        =    0.0000000 <DEGREE>
  EASTERNMOST_LONGITUDE        =   36.0000000 <DEGREE>
  LINE_PROJECTION_OFFSET       =    1600.000
  SAMPLE_PROJECTION_OFFSET     =       0.000
  COORDINATE_SYSTEM_TYPE       = "BODY-FIXED ROTATING"
  COORDINATE_SYSTEM_NAME       = "PLANETOCENTRIC"
END_OBJECT                     = IMAGE_MAP_PROJECTION

END
```

APPENDIX G. CDR BROWSE PRODUCT LABEL

```
PDS_VERSION_ID       = PDS3
LABEL_REVISION_NOTE  = "2008-01-18, S. Murchie"

/*** GENERAL DATA DESCRIPTION PARAMETERS ***/
MISSION_NAME         = "MESSENGER"
SPACECRAFT_NAME      = "MESSENGER"
INSTRUMENT_HOST_NAME = "MESSENGER"
DATA_SET_ID          = "MESS-E/V/H-MDIS-4-CDR-CALDATA-V1.0"
DATA_QUALITY_ID      = "0000001000000000"
PRODUCT_ID           = "CW0089570568G_IF_BRO0"
/* pcnnnnnnnnnnf_tt_BROv                 */
/* p = product type (C calibrated        */
/*     or D derived)                     */
/* c = camera (W WAC or N NAC)           */
/* nnnnnnnnnn = Mission Elapsed Time     */
/* f = filter                            */
/* tt = data type (RA radiance, IF I/F,  */
/*   or DE derived products)             */
/* v = version number                    */
SOURCE_PRODUCT_ID = "CW0089570568G_IF_0"
PRODUCER_INSTITUTION_NAME = "APPLIED COHERENT TECHNOLOGY CORPORATION"
SOFTWARE_NAME        = "mdiscal"
SOFTWARE_VERSION_ID  = 1.0
MISSION_PHASE_NAME   = "VENUS 2 FLYBY"
TARGET_NAME          = "VENUS"
SEQUENCE_TITLE       = "07156_APP_WAC_MOSAIC_1"

/*** TIME PARAMETERS ***/
START_TIME           = 2007-06-05T22:40:41.702888
STOP_TIME            = 2007-06-05T22:40:41.768887
SPACECRAFT_CLOCK_START_COUNT = "1/0089570568:924000"
SPACECRAFT_CLOCK_STOP_COUNT = "1/0089570568:990000"
PRODUCT_CREATION_TIME = 2007-11-13T23:30:37

/*** INSTRUMENT ENGINEERING PARAMETERS ***/
INSTRUMENT_NAME      = "MERCURY DUAL IMAGING SYSTEM WIDE ANGLE CAMERA"
INSTRUMENT_ID        = "MDIS-WAC"
FILTER_NAME          = "750 BP 5"
FILTER_NUMBER        = 7
CENTER_FILTER_WAVELENGTH = 750 <NM>
BANDWIDTH            = 5 <NM>
EXPOSURE_DURATION    = 66 <MS>
EXPOSURE_TYPE        = AUTO
DETECTOR_TEMPERATURE = -39.86  <degC>
FOCAL_PLANE_TEMPERATURE = -20.19  <degC>
FILTER_TEMPERATURE   = -20.66  <degC>
OPTICS_TEMPERATURE   = "N/A"

/*** INSTRUMENT RAW PARAMETERS ***/
MESS:MET_EXP         = 89570568
MESS:ATT_CLOCK_COUNT = 89570566
MESS:ATT_Q1          = 0.635328
MESS:ATT_Q2          = -0.259454
```

```
MESS:ATT_Q3          = -0.630866
MESS:ATT_Q4          = -0.362009
MESS:ATT_FLAG        = 7
MESS:PIV_GOAL        = 9008
MESS:PIV_POS         = 9007
MESS:PIV_READ        = 14244
MESS:PIV_CAL         = -26758
MESS:FW_GOAL         = 50148
MESS:FW_POS          = 50132
MESS:FW_READ         = 50132
MESS:CCD_TEMP        = 1025
MESS:CAM_T1          = 484
MESS:CAM_T2          = 490
MESS:EXPOSURE        = 66
MESS:DPU_ID          = 0
MESS:IMAGER          = 0
MESS:SOURCE          = 0
MESS:FPU_BIN         = 0
MESS:COMP12_8        = 0
MESS:COMP_ALG        = 2
MESS:COMP_FST        = 1
MESS:TIME_PLS        = 2
MESS:LATCH_UP        = 0
MESS:EXP_MODE        = 1
MESS:PIV_STAT        = 1
MESS:PIV_MPEN        = 1
MESS:PIV_PV          = 1
MESS:PIV_RV          = 1
MESS:FW_PV           = 1
MESS:FW_RV           = 1
MESS:AEX_STAT        = 640
MESS:AEX_STHR        = 5
MESS:AEX_TGTB        = 2800
MESS:AEX_BACB        = 240
MESS:AEX_MAXE        = 100
MESS:AEX_MINE        = 1
MESS:DLNKPRIO        = 4
MESS:WVLRATIO        = 4
MESS:PIXELBIN        = 0
MESS:SUBFRAME        = 0
MESS:SUBF_X1         = 4
MESS:SUBF_Y1         = 0
MESS:SUBF_DX1        = 0
MESS:SUBF_DY1        = 0
MESS:SUBF_X2         = 4
MESS:SUBF_Y2         = 0
MESS:SUBF_DX2        = 0
MESS:SUBF_DY2        = 0
MESS:SUBF_X3         = 0
MESS:SUBF_Y3         = 0
MESS:SUBF_DX3        = 0
MESS:SUBF_DY3        = 0
MESS:SUBF_X4         = 0
MESS:SUBF_Y4         = 0
MESS:SUBF_DX4        = 0
MESS:SUBF_DY4        = 0
MESS:SUBF_X5         = 0
```

```
MESS:SUBF_Y5          = 0
MESS:SUBF_DX5         = 0
MESS:SUBF_DY5         = 0
MESS:CRITOPNV         = 0
MESS:JAILBARS         = 0
MESS:JB_X0            = 0
MESS:JB_X1            = 0
MESS:JB_SPACE         = 0

/*** GEOMETRY INFORMATION ***/
RIGHT_ASCENSION       = 176.87216 <DEG>
DECLINATION           = -3.69716 <DEG>
TWIST_ANGLE           = 171.97896 <DEG>
RA_DEC_REF_PIXEL      = (512.00000,512.00000)
RETICLE_POINT_RA = (182.77358 <DEG>,172.41885 <DEG>,181.37369 <DEG>,
  170.89950 <DEG>)
RETICLE_POINT_DECLINATION = (0.76231 <DEG>,2.21637 <DEG>,-9.59692 <DEG>,
  -8.12579 <DEG>)

/*** TARGET PARAMETERS ***/
SC_TARGET_POSITION_VECTOR = (18408.66793 <KM>,-4290.87625 <KM>,
  3173.25955 <KM>)
TARGET_CENTER_DISTANCE = 19166.64420 <KM>

/*** TARGET WITHIN SENSOR FOV ***/
SLANT_DISTANCE        = 14090.89871 <KM>
CENTER_LATITUDE       = 35.73941 <DEG>
CENTER_LONGITUDE      = 226.54464 <DEG>
HORIZONTAL_PIXEL_SCALE = 2530.43332 <M>
VERTICAL_PIXEL_SCALE = 2530.43332 <M>
SMEAR_MAGNITUDE       = 10.38328 <PIXELS>
SMEAR_AZIMUTH         = 272.50295 <DEG>
NORTH_AZIMUTH         = 272.56310 <DEG>
RETICLE_POINT_LATITUDE = ("N/A",47.22207 <DEG>,24.61941 <DEG>,
  20.95210 <DEG>)
RETICLE_POINT_LONGITUDE = ("N/A",244.79392 <DEG>,208.68936 <DEG>,
  239.57209 <DEG>)

/*** SPACECRAFT POSITION WITH RESPECT TO CENTRAL BODY ***/
SUB_SPACECRAFT_LATITUDE = 14.91164 <DEG>
SUB_SPACECRAFT_LONGITUDE = 246.92915 <DEG>
SPACECRAFT_ALTITUDE = 13114.84420 <KM>
SUB_SPACECRAFT_AZIMUTH = 38.96248 <DEG>

/*** SPACECRAFT LOCATION ***/
SPACECRAFT_SOLAR_DISTANCE = 108026224.29985 <KM>
SC_SUN_POSITION_VECTOR = (-94861341.41580 <KM>,-49114033.01048 <KM>,
  -16087349.15147 <KM>)
SC_SUN_VELOCITY_VECTOR = (-6.96273 <KM/S>,29.34676 <KM/S>,
  17.78406 <KM/S>)

/*** VIEWING AND LIGHTING GEOMETRY (SUN ON TARGET) ***/
SOLAR_DISTANCE        = 108040911.97274 <KM>
SUB_SOLAR_AZIMUTH     = 11.49240 <DEG>
SUB_SOLAR_LATITUDE    = -1.29302 <DEG>
SUB_SOLAR_LONGITUDE   = 283.86863 <DEG>
INCIDENCE_ANGLE       = 64.85698 <DEG>
```

```
PHASE_ANGLE          = 30.69683 <DEG>
EMISSION_ANGLE       = 39.19187 <DEG>
LOCAL_HOUR_ANGLE     = 122.67601 <DEG>

/*** GEOMETRY FOR EACH SUBFRAME ***/
GROUP = SUBFRAME1_PARAMETERS
  RETICLE_POINT_LATITUDE = ("N/A","N/A","N/A","N/A")
  RETICLE_POINT_LONGITUDE = ("N/A","N/A","N/A","N/A")
END_GROUP = SUBFRAME1_PARAMETERS

GROUP = SUBFRAME2_PARAMETERS
  RETICLE_POINT_LATITUDE = ("N/A","N/A","N/A","N/A")
  RETICLE_POINT_LONGITUDE = ("N/A","N/A","N/A","N/A")
END_GROUP = SUBFRAME2_PARAMETERS

GROUP = SUBFRAME3_PARAMETERS
  RETICLE_POINT_LATITUDE = ("N/A","N/A","N/A","N/A")
  RETICLE_POINT_LONGITUDE = ("N/A","N/A","N/A","N/A")
END_GROUP = SUBFRAME3_PARAMETERS

GROUP = SUBFRAME4_PARAMETERS
  RETICLE_POINT_LATITUDE = ("N/A","N/A","N/A","N/A")
  RETICLE_POINT_LONGITUDE = ("N/A","N/A","N/A","N/A")
END_GROUP = SUBFRAME4_PARAMETERS

GROUP = SUBFRAME5_PARAMETERS
  RETICLE_POINT_LATITUDE = ("N/A","N/A","N/A","N/A")
  RETICLE_POINT_LONGITUDE = ("N/A","N/A","N/A","N/A")
END_GROUP = SUBFRAME5_PARAMETERS

/* These parameters describe the browse image as a PDS document. */

^DOCUMENT               = "CW0089570568G_IF_BRO0.PNG"
OBJECT                  = DOCUMENT
  DOCUMENT_NAME       = "CW0089570568G_IF_BRO0"
  DOCUMENT_FORMAT     = PNG
  DOCUMENT_TOPIC_TYPE = "BROWSE IMAGE"
  INTERCHANGE_FORMAT  = BINARY
  PUBLICATION_DATE    = 2008-01-17
  SOURCE_PRODUCT_ID   = "CW0089570568G_IF_0"
  LINES               = 1024
  LINE_SAMPLES        = 1024
  SAMPLE_TYPE         = LSB_UNSIGNED_INTEGER
  SAMPLE_BITS         = 8
  DERIVED_MINIMUM     = 0
  DERIVED_MAXIMUM     = 250
  OFFSET              = 0
  SCALING_FACTOR      = 2000
  MISSING_CONSTANT    = 255
  DESCRIPTION         = "This file is a scaled image of an MDIS CDR
                         calibrated to units of I/F."
END_OBJECT            = DOCUMENT
END
```

APPENDIX H. BDR BROWSE PRODUCT LABEL

```
PDS_VERSION_ID         = PDS3
LABEL_REVISION_NOTE    = "2008-01-18, S. Murchie"

/* Map-projected Basemap RDR Identification */

DATA_SET_ID            = "MESS-E/V/H-MDIS-5-BDR-V1.0"
PRODUCT_ID             = "BDRIF_25N000_0256_BRO0"
                      /*(BDRss_yydxxx_rrrr_BROv                    )*/
                      /*(ss = subtype of image product, IF for I/F, )*/
                      /*(     AL for photometrically corrected      )*/
                      /*(     I/F, DE for derived                   )*/
                      /*(yy = latitude of upper left corner         )*/
                      /*(d = N or S for north or south latitude     )*/
                      /*(xxx = east longitude of upper left corner  )*/
                      /*(rrrr = resolution in pixels/degree         )*/
                      /*(v = version number                         )*/

MISSION_NAME           = "MESSENGER"
SPACECRAFT_NAME        = "MESSENGER"
INSTRUMENT_HOST_NAME   = "MESSENGER"
INSTRUMENT_NAME        = {"MERCURY DUAL IMAGING SYSTEM WIDE ANGLE
                           CAMERA",
                          "MERCURY DUAL IMAGING SYSTEM NARROW ANGLE
                           CAMERA"}
INSTRUMENT_ID                  = {"MDIS-WAC","MDIS-NAC"}
TARGET_NAME                    = MERCURY
PRODUCT_TYPE                   = MAP_PROJECTED_BASEMAP_RDR
PRODUCT_CREATION_TIME          = 2011-10-25T23:17:20.029
START_TIME                     = "NULL"
STOP_TIME                      = "NULL"
SPACECRAFT_CLOCK_START_COUNT   = "NULL"
SPACECRAFT_CLOCK_STOP_COUNT    = "NULL"
PRODUCT_VERSION_ID             = "1"
PRODUCER_INSTITUTION_NAME      = "APPLIED COHERENT TECHNOLOGY
                                  CORPORATION"
SOFTWARE_NAME                  = "PIPE_create_mdis_bdr_product"
SOFTWARE_VERSION_ID            = "10.16.07"

/* This Map Projected Basemap RDR label describes one data file:     */
/*   1. A multiple-band image file of calibrated RDR data in I/F     */
/* This RDR represents one latitude-longitude bin in a global map.   */
/* See the Map Projection Object below for bin coordinates and       */
/* resolution.                                                       */
/* See the MDIS CDR/RDR SIS for more detailed description.           */

/*Description of MAP PROJECTED MULTISPECTRAL RDR RADIANCE IMAGE file*/


^DOCUMENT              = "BDRIF_25N000_0256_BRO0.PNG"
OBJECT                 = DOCUMENT
  DOCUMENT_NAME        = "BDRIF_25N000_0256_BRO0"
  DOCUMENT_FORMAT      = PNG
  DOCUMENT_TOPIC_TYPE  = "BROWSE IMAGE"
```

```
  INTERCHANGE_FORMAT  = BINARY
  PUBLICATION_DATE    = 2008-01-17
  SOURCE_PRODUCT_ID   = "BDRIF_25N000_0256_0"
  LINES               = 6400
  LINE_SAMPLES        = 9216
  SAMPLE_TYPE         = LSB_UNSIGNED_INTEGER
  SAMPLE_BITS         = 8
  DERIVED_MINIMUM     = 0
  DERIVED_MAXIMUM     = 250
  OFFSET              = 0
  SCALING_FACTOR      = 2000
  MISSING_CONSTANT    = 255
  DESCRIPTION         = "This file is a scaled image of an MDIS BDR
                         calibrated to units of I/F."
END_OBJECT            = DOCUMENT

/* Map projection information about this RDR is in the               */
/* IMAGE_MAP_PROJECTION object below.                                */

OBJECT                          = IMAGE_MAP_PROJECTION
  ^DATA_SET_MAP_PROJECTION      = "BDR_MAP.CAT"
  MAP_PROJECTION_TYPE           = "EQUIRECTANGULAR"
  A_AXIS_RADIUS                 = 2440.0 <KM>
  B_AXIS_RADIUS                 = 2440.0 <KM>
  C_AXIS_RADIUS                 = 2440.0 <KM>
  FIRST_STANDARD_PARALLEL       = "N/A"
  SECOND_STANDARD_PARALLEL      = "N/A"
  POSITIVE_LONGITUDE_DIRECTION = "EAST"
  CENTER_LATITUDE               = 0.0000000 <DEGREE>
  CENTER_LONGITUDE              = 0.000000  <DEGREE>
  REFERENCE_LATITUDE            = "N/A"
  REFERENCE_LONGITUDE           = "N/A"
  LINE_FIRST_PIXEL              = 1      /* North edge */
  LINE_LAST_PIXEL               = 6400   /* South edge */
  SAMPLE_FIRST_PIXEL            = 1      /* West edge */
  SAMPLE_LAST_PIXEL             = 9216   /* East edge */
  MAP_PROJECTION_ROTATION       = 0.0
  MAP_RESOLUTION                = 256 <PIXEL/DEGREE>
  MAP_SCALE                     = 0.16633124125 <KM/PIXEL>
  MAXIMUM_LATITUDE              =   25.0000000 <DEGREE>
  MINIMUM_LATITUDE              =    0.0000000 <DEGREE>
  WESTERNMOST_LONGITUDE         =    0.0000000 <DEGREE>
  EASTERNMOST_LONGITUDE         =   36.0000000 <DEGREE>
  LINE_PROJECTION_OFFSET        =    6400.000
  SAMPLE_PROJECTION_OFFSET      =       0.000
  COORDINATE_SYSTEM_TYPE        = "BODY-FIXED ROTATING"
  COORDINATE_SYSTEM_NAME        = "PLANETOCENTRIC"
END_OBJECT                      = IMAGE_MAP_PROJECTION

END
```

APPENDIX I. MDR BROWSE PRODUCT LABEL

```
PDS_VERSION_ID         = PDS3
LABEL_REVISION_NOTE    = "2008-01-18, S. Murchie"

/* Map-projected Multispectral RDR Identification */

DATA_SET_ID            = "MESS-E/V/H-MDIS-5-MDR-V1.0"
PRODUCT_ID             = "MDRIF_25N000_0064_BRO0"
                      /*(MDRss_yydxxx_rrrr_v                        )*/
                      /*(ss = subtype of image product, IF for I/F, )*/
                      /*(     AL for photometrically corrected      )*/
                      /*(     I/F, DE for derived                   )*/
                      /*(yy = latitude of upper left corner         )*/
                      /*(d = N or S for north or south latitude     )*/
                      /*(xxx = east longitude of upper left corner  )*/
                      /*(rrrr = resolution in pixels/degree         )*/
                      /*(v = version number                         )*/

MISSION_NAME           = "MESSENGER"
SPACECRAFT_NAME        = "MESSENGER"
INSTRUMENT_HOST_NAME   = "MESSENGER"
INSTRUMENT_NAME        = "MERCURY DUAL IMAGING SYSTEM WIDE ANGLE
                             CAMERA"
INSTRUMENT_ID                  = "MDIS-WAC"
TARGET_NAME                    = MERCURY
PRODUCT_TYPE                   = MAP_PROJECTED_MULTISPECTRAL_RDR
PRODUCT_CREATION_TIME          = 2011-10-25T23:17:20.029
START_TIME                     = "NULL"
STOP_TIME                      = "NULL"
SPACECRAFT_CLOCK_START_COUNT   = "NULL"
SPACECRAFT_CLOCK_STOP_COUNT    = "NULL"
PRODUCT_VERSION_ID             = "1"
PRODUCER_INSTITUTION_NAME      = "APPLIED COHERENT TECHNOLOGY
                                  CORPORATION"
SOFTWARE_NAME                  = "PIPE_create_mdis_mdr_product"
SOFTWARE_VERSION_ID            = "10.16.07"

/*This Map Projected Multispectral RDR label describes one data file:*/
/*  1. A multiple-band image file of calibrated RDR data in I/F      */
/*This MDR represents one latitude-longitude bin in a global map.    */
/*See the Map Projection Object below for bin coordinates and        */
/*resolution.                                                        */
/*See the MDIS CDR/RDR SIS for more detailed description.            */

/* Description of MAP PROJECTED MULTISPECTRAL RDR RADIANCE IMAGE file*/

^DOCUMENT              = "MDRIF_25N000_0064_BRO0.PNG"
OBJECT                 = DOCUMENT
  DOCUMENT_NAME        = "MDRIF_25N000_0064_BRO0"
  DOCUMENT_FORMAT      = PNG
  DOCUMENT_TOPIC_TYPE  = "BROWSE IMAGE"
  INTERCHANGE_FORMAT   = BINARY
  PUBLICATION_DATE     = 2008-01-17
  SOURCE_PRODUCT_ID    = "MDRIF_25N000_0064_0"
```

```
  LINES                = 6400
  LINE_SAMPLES         = 9216
  SAMPLE_TYPE          = LSB_UNSIGNED_INTEGER
  SAMPLE_BITS          = 8
  BANDS                = 3
  BAND_SEQUENCE        = "(RED, GREEN, BLUE)"
  BAND_NAME            = ("1000 BP 15","750 BP 5","430 BP 40")
  DERIVED_MINIMUM      = (0,0,0)
  DERIVED_MAXIMUM      = (250,250,250)
  OFFSET               = (0,0,0)
  SCALING_FACTOR       = (2000,2000,2000)
  MISSING_CONSTANT     = (255,255,255)
  DESCRIPTION          = "This file is a scaled false color image of
                          an MDIS MDR calibrated to units of I/F."
END_OBJECT             = DOCUMENT

/* Map projection information about this RDR is in the                */
/* IMAGE_MAP_PROJECTION object below.                                 */

OBJECT                          = IMAGE_MAP_PROJECTION
  ^DATA_SET_MAP_PROJECTION      = "MDR_MAP.CAT"
  MAP_PROJECTION_TYPE           = "EQUIRECTANGULAR"
  A_AXIS_RADIUS                 = 2440.0 <KM>
  B_AXIS_RADIUS                 = 2440.0 <KM>
  C_AXIS_RADIUS                 = 2440.0 <KM>
  FIRST_STANDARD_PARALLEL       = "N/A"
  SECOND_STANDARD_PARALLEL      = "N/A"
  POSITIVE_LONGITUDE_DIRECTION = "EAST"
  CENTER_LATITUDE               = 0.0000000 <DEGREE>
  CENTER_LONGITUDE              = 0.000000 <DEGREE>
  REFERENCE_LATITUDE            = "N/A"
  REFERENCE_LONGITUDE           = "N/A"
  LINE_FIRST_PIXEL              = 1      /* North edge */
  LINE_LAST_PIXEL               = 6400   /* South edge */
  SAMPLE_FIRST_PIXEL            = 1      /* West edge */
  SAMPLE_LAST_PIXEL             = 9216   /* East edge */
  MAP_PROJECTION_ROTATION       = 0.0
  MAP_RESOLUTION                = 64 <PIXEL/DEGREE>
  MAP_SCALE                     = 0.66532496501 <KM/PIXEL>
  MAXIMUM_LATITUDE              =   25.0000000 <DEGREE>
  MINIMUM_LATITUDE              =    0.0000000 <DEGREE>
  WESTERNMOST_LONGITUDE         =    0.0000000 <DEGREE>
  EASTERNMOST_LONGITUDE         =   36.0000000 <DEGREE>
  LINE_PROJECTION_OFFSET        =    1600.000
  SAMPLE_PROJECTION_OFFSET      =       0.000
  COORDINATE_SYSTEM_TYPE        = "BODY-FIXED ROTATING"
  COORDINATE_SYSTEM_NAME        = "PLANETOCENTRIC"
END_OBJECT                      = IMAGE_MAP_PROJECTION

END
```

APPENDIX J. ATMEL TH7888A DATA SHEET

Features

- 1024 x 1024 Pixels with Memory Zone
- Up to 30 Images/Second
- Built-in Antiblooming Device Providing an Electric Shutter Function
- Pixel: 14 µm x 14 µm
- Image Zone: 14.34 x 14.34 mm^2
- Two Outputs at 20 MHz Each
- Readout Through 1 or 2 Outputs
- Possible Binning 2 x 2
- Optical Shield Against Parasitic Reflexions and Stray Light
- A/R Window in 400 - 700 nm Bandwidth

Description

The TH7888A is particularly designed for high data rate applications (up to 30 pictures/second in 1024 x 1024 progressive scan format) in the medical and industrial fields. This area array image sensor consists of a 1024 x 1024 pixels (14 µm x 14 µm) image zone associated with a memory zone (masked with an optical shield). To increase the data rate, two separate outputs are provided, which can be used for parallel readout (the readout frequency is up to 20 MHz/output, leading to a total readout frequency of 40 MHz). These two outputs allow three readout modes (single or dual port). The TH7888A is designed with an antiblooming structure which provides an electronic shutter capability. Moreover, the 2 x 2 binning mode is available on this sensor, providing an image size of 512 x 512 pixels with 28 µm x 28 µm pixels. The TH7888A package is sealed with a specific anti-reflective window optimized in the 400 - 700 nm spectrum bandwidth on the sealed version.

Area Array CCD Image Sensor (1024 x 1024 Pixels with Antiblooming)

TH7888A

Rev. 1999A–IMAGE–09/03

Atmel Headquarters

Corporate Headquarters
2325 Orchard Parkway
San Jose, CA 95131, USA
TEL 1(408) 441-0311
FAX 1(408) 487-2600

Europe
Atmel Sarl
Route des Arsenaux 41
Case Postale 80
CH-1705 Fribourg
Switzerland
TEL (41) 26-426-5555
FAX (41) 26-426-5500

Asia
Room 1219
Chinachem Golden Plaza
77 Mody Road Tsimshatsui
East Kowloon
Hong Kong
TEL (852) 2721-9778
FAX (852) 2722-1369

Japan
9F, Tonetsu Shinkawa Bldg.
1-24-8 Shinkawa
Chuo-ku, Tokyo 104-0033
Japan
TEL (81) 3-3523-3551
FAX (81) 3-3523-7581

Atmel Operations

Memory
2325 Orchard Parkway
San Jose, CA 95131, USA
TEL 1(408) 441-0311
FAX 1(408) 436-4314

Microcontrollers
2325 Orchard Parkway
San Jose, CA 95131, USA
TEL 1(408) 441-0311
FAX 1(408) 436-4314

La Chantrerie
BP 70602
44306 Nantes Cedex 3, France
TEL (33) 2-40-18-18-18
FAX (33) 2-40-18-19-60

ASIC/ASSP/Smart Cards
Zone Industrielle
13106 Rousset Cedex, France
TEL (33) 4-42-53-60-00
FAX (33) 4-42-53-60-01

1150 East Cheyenne Mtn. Blvd.
Colorado Springs, CO 80906, USA
TEL 1(719) 576-3300
FAX 1(719) 540-1759

Scottish Enterprise Technology Park
Maxwell Building
East Kilbride G75 0QR, Scotland
TEL (44) 1355-803-000
FAX (44) 1355-242-743

RF/Automotive
Theresienstrasse 2
Postfach 3535
74025 Heilbronn, Germany
TEL (49) 71-31-67-0
FAX (49) 71-31-67-2340

1150 East Cheyenne Mtn. Blvd.
Colorado Springs, CO 80906, USA
TEL 1(719) 576-3300
FAX 1(719) 540-1759

Biometrics/Imaging/Hi-Rel MPU/ High Speed Converters/RF Datacom
Avenue de Rochepleine
BP 123
38521 Saint-Egreve Cedex, France
TEL (33) 4-76-58-30-00
FAX (33) 4-76-58-34-80

Literature Requests
www.atmel.com/literature

© Atmel Corporation 2003.
Atmel Corporation makes no warranty for the use of its products, other than those expressly contained in the Company's standard warranty which is detailed in Atmel's Terms and Conditions located on the Company's web site. The Company assumes no responsibility for any errors which may appear in this document, reserves the right to change devices or specifications detailed herein at any time without notice, and does not make any commitment to update the information contained herein. No licenses to patents or other intellectual property of Atmel are granted by the Company in connection with the sale of Atmel products, expressly or by implication. Atmel's products are not authorized for use as critical components in life support devices or systems.

© Atmel Corporation 2003. All rights reserved. Atmel® is the registered trademark of Atmel Corporation or its subsidiaries. Other terms and product names may be the trademarks of others.

Printed on recycled paper.

1999A–IMAGE–09/03 0M

Figure 1. TH7888A General Sensor Organization

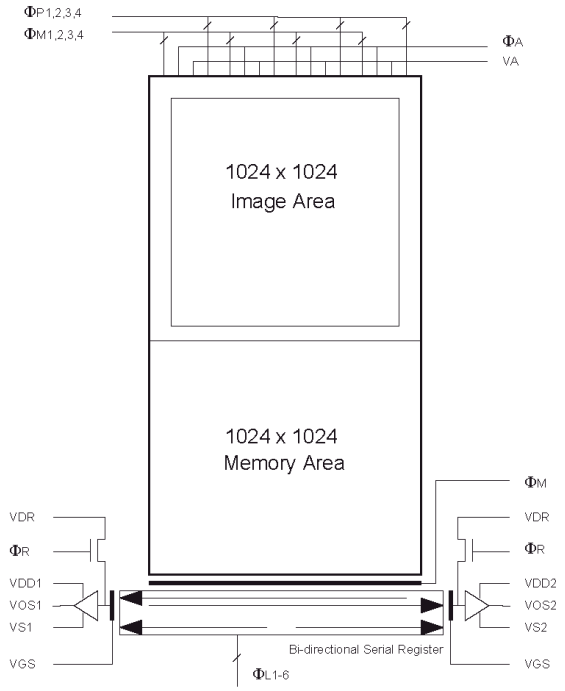

Functional Overview

Extra dark lines are provided for use as dark references or for smearing digital correction.

Extra dark pixels are provided for dark line reference clamping. Each frame consists of 1056 video lines:

- 1 dummy line
- 12 useful dark reference lines (with optical shield)
- 3 isolation lines
- 1024 useful lines
- 3 isolation lines
- 12 dark reference lines (with optical shield)
- 1 dummy line

Each video line is made up of 546 or 1058 elements, depending on the readout mode (single or dual port mode):

- 12 inactive prescan elements
- 1 isolation prescan element
- 16 useful dark references (with optical shield)
- 5 isolation elements
- 512 or 1024 useful video pixels

Pin Description

Figure 2. Pin Overview

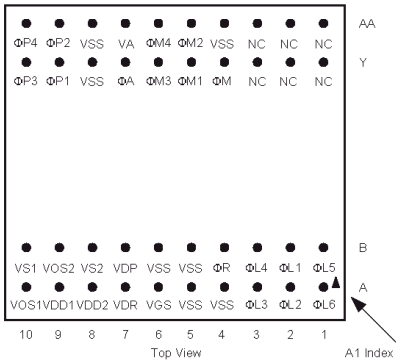

Table 1. Pin Description

Pin Number	Symbol	Designation
Y9	ΦP1	Image zone clocks
AA9	ΦP2	
Y10	ΦP3	
AA10	ΦP4	
Y5	ΦM1	Memory zone clocks
AA5	ΦM2	
Y6	ΦM3	
AA6	ΦM4	
Y4	ΦM	Memory to register clock
B2	ΦL1	Readout register clocks
A2	ΦL2	
A3	ΦL3	
B3	ΦL4	
B1	ΦL5	
A1	ΦL6	
A9	VDD1	Output amplifier drain supply
A8	VDD2	
B10	VS1	Output amplifier source supply
B8	VS2	
B7	VDP	Protection drain bias
A6	VGS	Register output gate bias
A10	VOS1	Video outputs
B9	VOS2	
B4	ΦR	Reset clock

Table 1. Pin Description (Continued)

Pin Number	Symbol	Designation
Y7	ΦA	Antiblooming gate clock
A7	VDR	Reset bias
AA7	VA	Antiblooming diode bias
A4, A5, B5, B6	VSS	Substrate bias
Y8, AA4, AA8	VSS	

Geometrical Characteristics

Figure 3. Pixel Layout

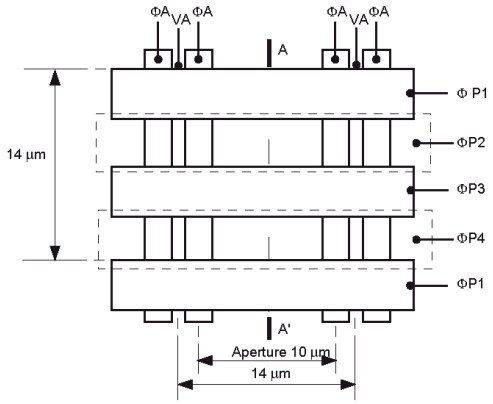

Figure 4. AA Cross Section

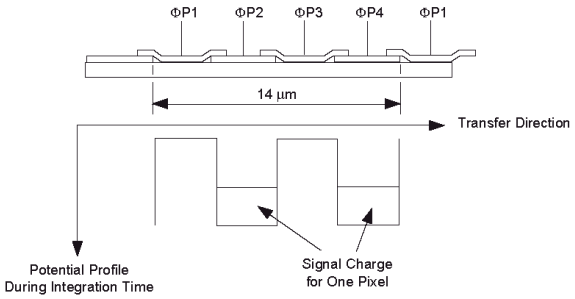

Absolute Maximum Ratings*

Storage Temperature	-55°C to +150°C
Operating Temperature	-40°C to +85°C
Thermal Cycling	15°C/mn
Maximum Applied Voltages:	
• Pins: Y9, AA9, Y10, AA10, Y5, AA5, Y6, AA6, Y4, B2, A2, A3, B3, B1, A1, B4, A6	-0.3 V to 15 V
• Pins: A9, A8, B10, B8, B7, A7, AA7	-0.3 V to 15.5 V
• Pin: Y7	-0.3 V to 12 V
• Pins: A4, A5, B5, B6, Y8, AA4, AA8	0 V (ground)

*NOTICE: *Stresses above those listed under absolute maximum ratings may cause permanent device failure. Functionality at or above these limits is not implied. Exposure to absolute maximum ratings for extended periods may affect device reliability. Operating range defines the limits within which functionality is guaranteed. Electrical limits of applied signals are given in the operating conditions section.

Operating Precautions

Shorting the video outputs to any pin, even temporarily, can permanently damage the on-chip output amplifier.

Operating Conditions

Table 2. DC Characteristics

Parameter	Symbol	Value			Unit
		Min	Typ	Max	
Output amplifier drain supply	VDD1, VDD2	14.5	15	15.5	V
Protection drain bias	VDP	14.5	15	15.5	V
Reset bias	VDR	14.5	15	15.5	V
Antiblooming diode bias	VA	14.5	15	15.5	V
Register output gate bias	VGS	2.2	2.5	2.8	V
Output amplifier source supply	VS1(2), VS2		0		V
Ground(1)	VSS(2)		0		V

Notes: 1. Ground: note that the package metal back is grounded.
2. In dynamic mode, to avoid possible damage to the device, the addition of a Schottky diode is recommended (for example; diode reference BAR 43S) between VS1 and VSS ground in order to increase the potential on VS1, thus avoiding any direct mode diode current during clock transitions.

Readout Mode

The serial readout register is operated in a two-phase transfer mode. However, there are 6 separate command electrodes that should be connected differently, depending on the required readout mode. The following table gives the connections to be made for each mode.

Table 3. Readout Modes

Readout Modes Drive Clocks (Signals)	1 Output, VOS 1	1 Output, VOS2 (Mirror Effect)	2 Outputs (Parallel)
ΦL1	Pins B2, B3, B1	Pins B2, A3, A1	Pins B2, B3, A1
ΦL2	Pins A2, A3, A1	Pins A2, B3, B1	Pins A2, A3, B1

Table 4. Timing Parameters

Definition	Symbol	Comments
Vertical transfer period	T_V	Nominal value = 800 nm
Vertical transfer subdivision	T_O	Tv = 8 x To
Rise time	tr	For vertical transfer clocks (between 10% and 90% of the transition time)
Fall time	tf	
Readout register clock transition time	t1	
Reset clock transition time	t2	
Delay between output reset signal and reset clock	td	

Timing Diagrams

The following diagrams describe the 20 MHz readout frequency and 1.25 MHz vertical transfer frequency.

Figure 5. Frame Timing Diagram

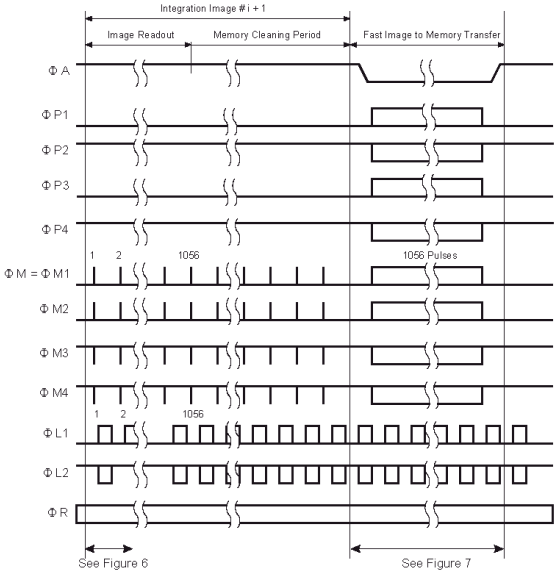

Figure 6. Line Timing Diagram

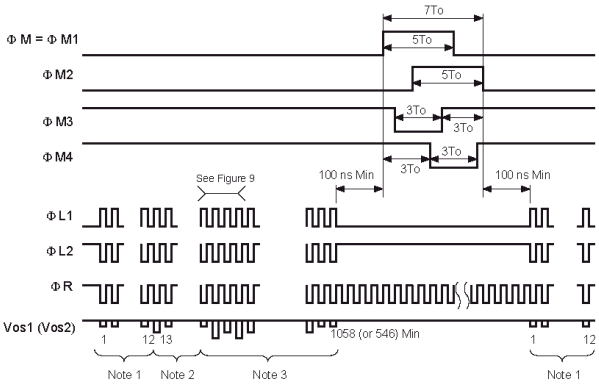

Notes:
1. 12 pre-scan elements
2. 1 isolation element, 16 dark reference pixels, 5 isolation elements
3. 1024 useful video pixels (single output readout mode), 512 useful video pixels (dual output readout mode)

Figure 7. Vertical Transfer During Image to Memory Zone Transfer

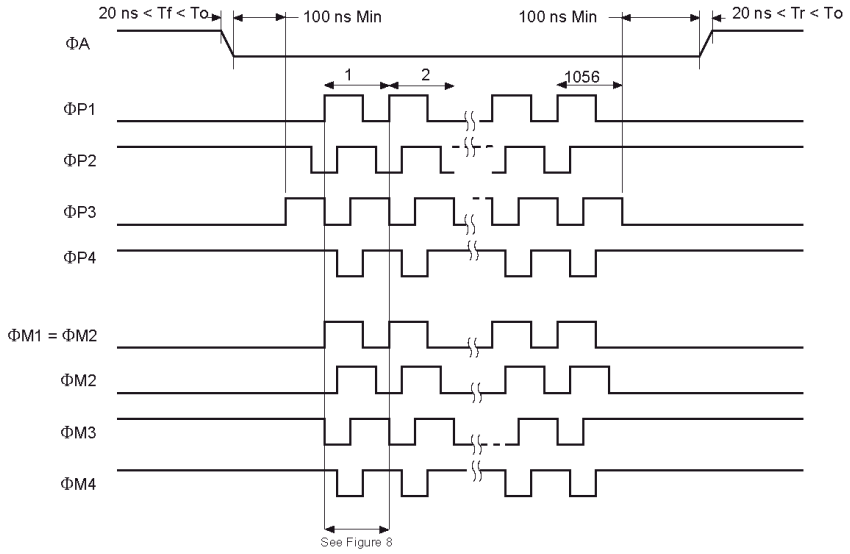

Figure 8. Transfer Period from Image Zone to Memory Zone (ΦP and ΦM for 1.25 Vertical Transfer Frequency FV = 1: Tv)

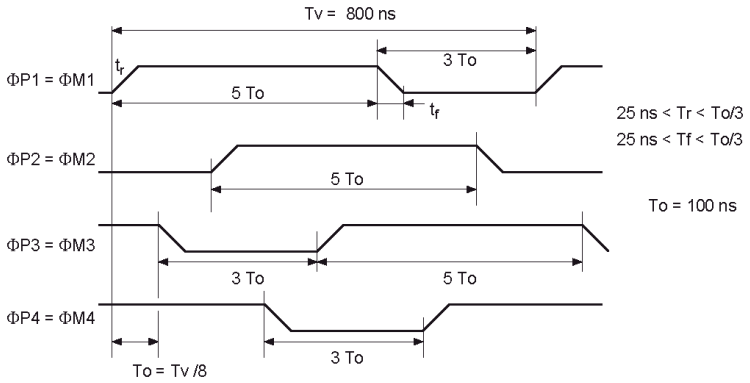

Note: Tr = Rise time
Tf = Fall time
To = Vertical transfer time subdivision
Tv = Vertical transfer period.

Figure 9. Output Diagram for Readout Register and Reset Clock 20 MHz Applications
Crossover of Complementary Clocks (ΦL1, ΦL2). Between 30% and 70% of Maximum Amplitude.

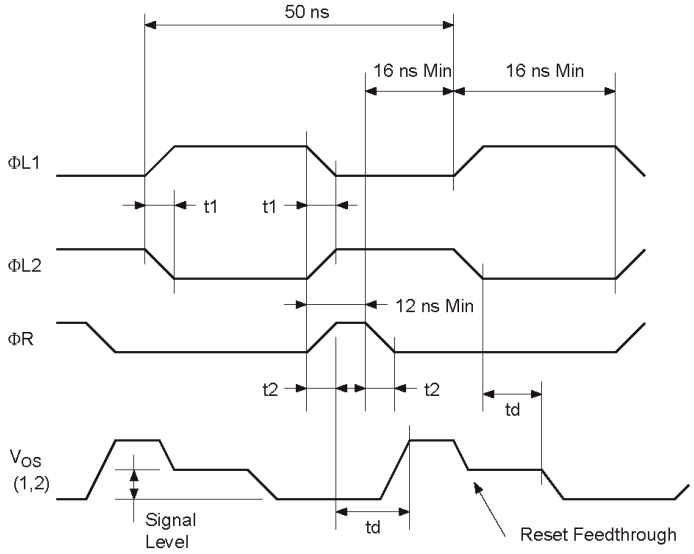

Note: t1 = 7 ns typical
t2 = 5 ns typical
td = 8 ns typical delay time

Binning Mode Operation

In binning mode operation, the image is composed of 512 x 512 pixels (28 µm x 28 µm each).

Figure 10. Summation in the Readout Register of Two Adjacent Lines

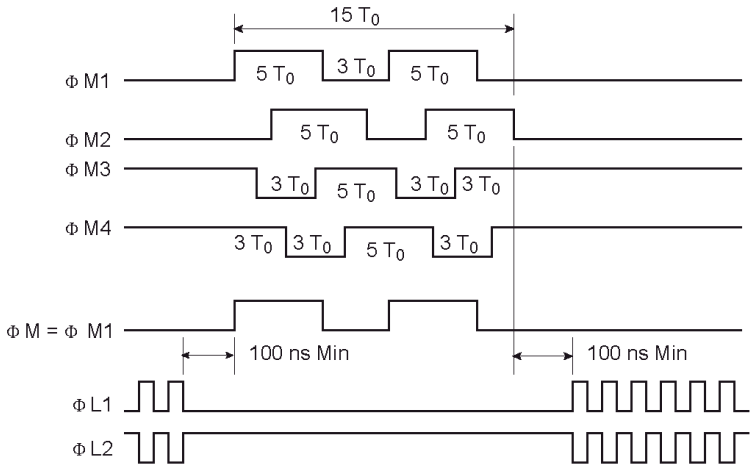

Note: To view fall and rise times see Figure 8 on page 8

Figure 11. Summation of Two Adjacent Pixels

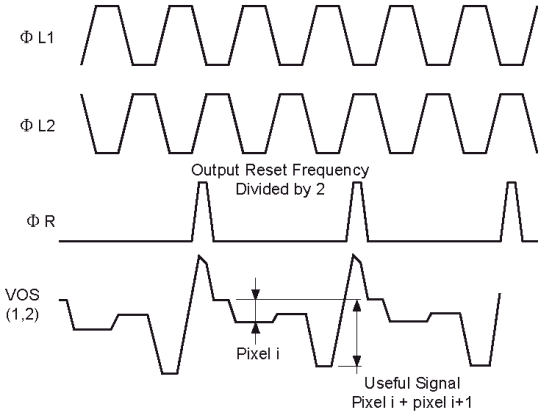

Exposure Time Reduction

The TH7888A provides an exposure time control (electronic shutter) function.

The exposure time reduction is achieved by pulsing all the ΦPi gates to 0 V to continuously remove all the photogenerated electrons through antiblooming drain VA.

Figure 12. Timing Diagram for Electronic Shutter

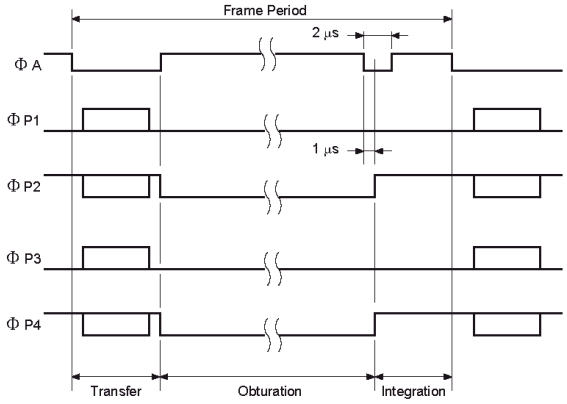

Note: To view fall and rise times see Figure 6 on page 7

Table 5. Drive Clock Characteristics

Parameter	Symbol	Value Min	Value Typ	Value Max	Unit	Remarks
Image zone clocks High level Low level	ΦP1, 1, 3, 4	 7.5 0	 8 0.5	 8.5 0.8	 V V	Typical input capacitance 15 nF See Figure 12
Memory zone clocks High level Low level	ΦM1, 2, 3, 4	 7.5 0	 8 0.5	 8.5 0.8	 V V	Typical input capacitance 15.5 nF See Figure 12
Memory register clocks High level Low level	ΦM	 8.5 0	 9 0.5	 9.5 0.8	 V V	Typical input capacitance 10 pF
Antiblooming gate High level (integration) Low level (transfer)	ΦA	 3 0	 4 0.5	 7 0.8	 V V	Typical input capacitance 14 nF See Figure 12 and Figure 14
Reset gate High level Low level	ΦR	 10 0	 12 2	 13 3	 V V	Typical input capacitance 10 pF
Readout register clocks High level Low level	ΦL1, 2	 8.5 0	 9 0.5	 9.5 0.8	 V V	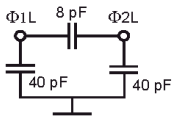
Maximum readout register frequency	F_H	20	–	–	MHz	See Figure 9
Maximum image zone to memory zone Transfer frequency	F_V	1.7	–	–	MHz	See Figure 14

Figure 13. Drive Clocks Capacitance Network

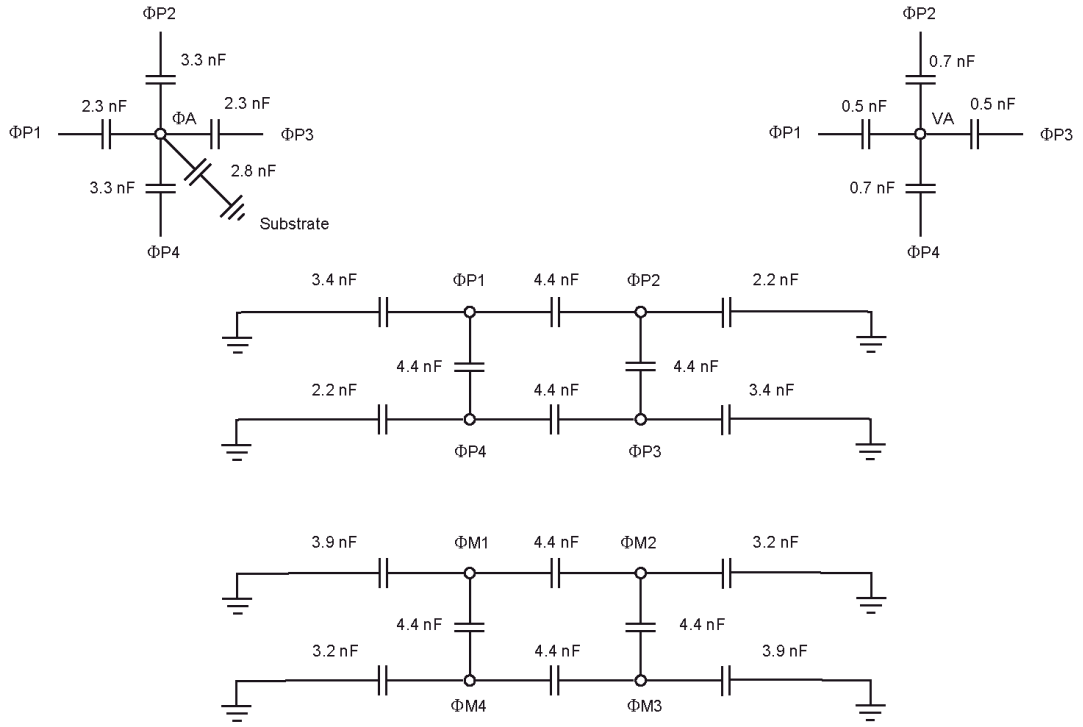

Table 6. Static and Dynamic Electrical Characteristics

Parameter	Symbol	Value			Unit	Remarks
		Min	Typ	Max		
Output amplifier supply current	I_{DD}		10	15	mA	per amplifier
Output impedance	Z_S	200	225	250	Ω	
DC output level	V_{REF}		11		V	
Output conversion factor	CVF	5.5	6	6.5	µV/e-	

Electro-optical Performance

- General conditions:
  Temp = 25°C (package temperature)
  Light source: 2854 K with 2 mm BG38 filter (unless specified) + F/3.5 optical aperture.
  30 images per second mode (Ti = 33 ms) under typical operating conditions
- Readout mode: 2 outputs
- Values exclude dummy elements and blemishes

Table 7. Performance Description and Values

Parameter	Symbol	Value			Unit	Remarks
		Min	Typ	Max		
Output register saturation level	V_{SAT} reg	–	2.6	–	V	
Pixel saturation level	V_{SAT}	1.6	1.9	3	V	(1)
Pixel saturation charge (electron per pixel)	Q_{SAT}	–	320	–	ke-	
Responsivity at 640 nm Responsivity with BG38 filter	R	– 3	6.5 4	– –	V/(µJ/cm^2) V/(µJ/cm^2)	
Quantum efficiency at 640 nm	QE	–	15	–	%	See Figure 17
Photo response non uniformity (1σ)	PRNU	–	0.4	1.7	%Vos	
Dark signal non uniformity (1σ)	DSNU	–	0.28	0.4	mV	(2)
Average dark signal	V_{DS}	–	2	3	mV	(3)
		–	4	5.6	mV	(4)
Temporal RMS noise in darkness (last line)	V_N	–	200	–	µV	(5)
Dynamic range	D	–	80	–	dB	(6)
Horizontal modulation transfer function at 500 nm	MTF	–	70	–	%	(7)
Vertical charge transfer inefficiency (per stage)	VCTI	–	–	$2.5.10^{-5}$	–	(8)
Horizontal charge transfer inefficiency (per stage)	HCTI	–	–	5.10^{-5}	–	(9)

Notes:
1. Pixel saturation (full well) as a function of vertical transfer frequency (see Figure 14 on page 15) and antiblooming adjustment (see Figure 15 on page 15).
2. After substraction of dark signal slope due to memory readout time.
3. First line level referenced from inactive prescan elements (12 samples).
4. Last line level referenced from inactive prescan elements (12 samples).
5. Measured with Correlated Double Sampling (CDS) including 160 µV readout noise and dark current noise in general test conditions.
6. Saturation to RMS noise in darkness ratio.
7. At Nyquist frequency.
8. VSAT/2 measurement and 417 kHz vertical transfer frequency.
9. VSAT/2 measurement and 10 MHz horizontal transfer frequency.

Figure 14. Saturation Level by Full Well with Antiblooming Off (ΦA High = 0 V) Versus the Vertical Transfer Frequency

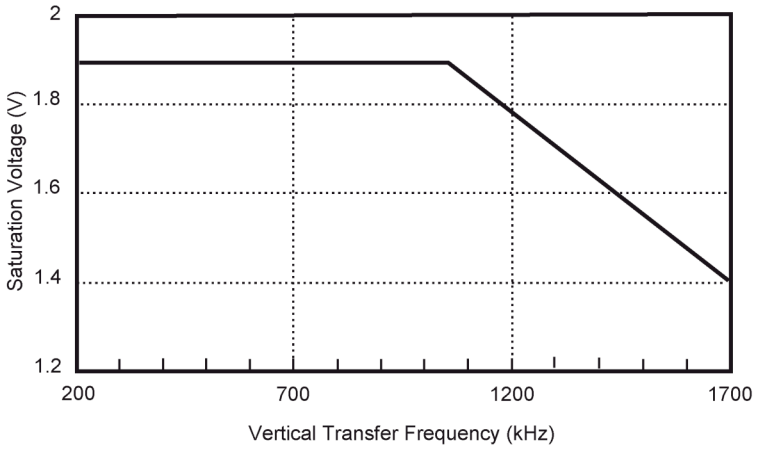

Figure 15. Saturation Level Limitation by the Antiblooming Effect on the Pixel (Typical Operating Conditions)

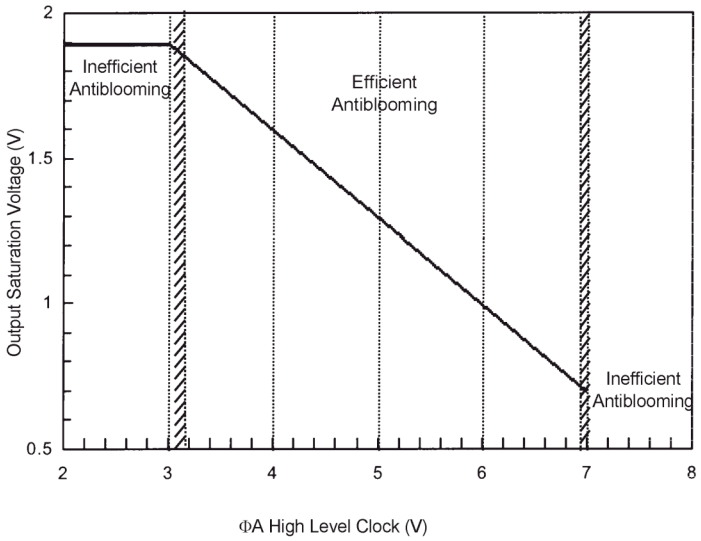

Figure 16. Smearing Effect

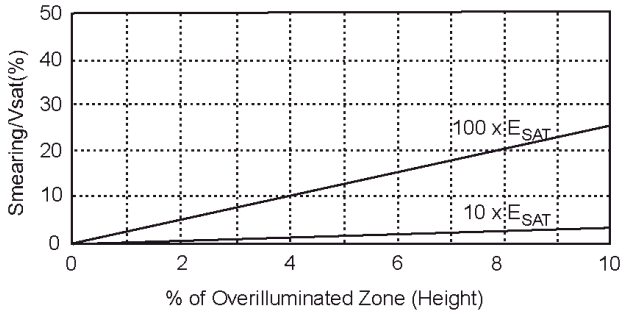

N_{ESAT} = number of times E_{SAT}

$$\frac{V_{SMEARING}}{V_{SAT}} = N_{ESAT} \times \frac{T_V}{T_I} \times H$$

with $E_{SAT} = V_{SAT}$/responsivity
(typical illumination conditions)

- Ti = integration time
- Tv = image to memory transfer time

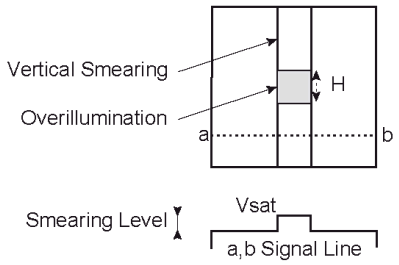

Figure 17. Spectral Response with A/R Window (Typical Case)

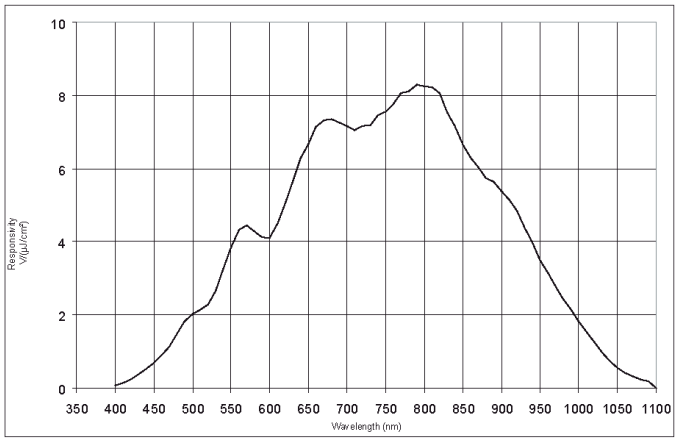

Image Quality Grade

Blemish Maximum area of 2 x 2 defective pixels.

Clusters Less than 7 contiguous defects in a column.

Columns More than 7 contiguous defects in a column.

General Conditions

Room Temperature .....25°C

Frequency 30 images/s(under typical operating conditions)

Considered image zone .....1024 x 1024

Light Source 2854K with BG38 filter + F/3.5 optical aperture

At Vos = 0.7 Vsat

Type	White	Black
Blemishes/clusters	α > 20% $\overline{V}$os	$\lvert\alpha\rvert$ > 30% $\overline{V}$os
Columns	α > 10% $\overline{V}$os	$\lvert\alpha\rvert$ > 10% $\overline{V}$os

In Darkness

Blemishes/clusters	α > 10 mV (*)
Columns	α > 5 mV (*)
(*) reference is Vo: average darkness signal	

Number of Defects

Total pixel numbers affected by blemishes and clusters 100

Maximum number of clusters.....10

Maximum number of columns.....5

α: amplitude of video signal of defect with respect to mean output voltage $\overline{V}os$

Ordering Codes

TH7888AVRHRB: sealed version

TH7888AVRHN: unsealed version

Figure 18. Ordering Information Key

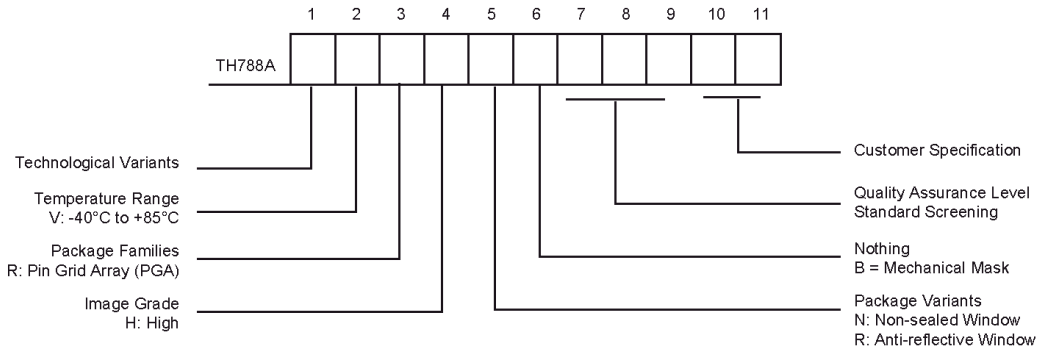

Package Outline

Figure 19. Package Drawing for 40-lead PGA

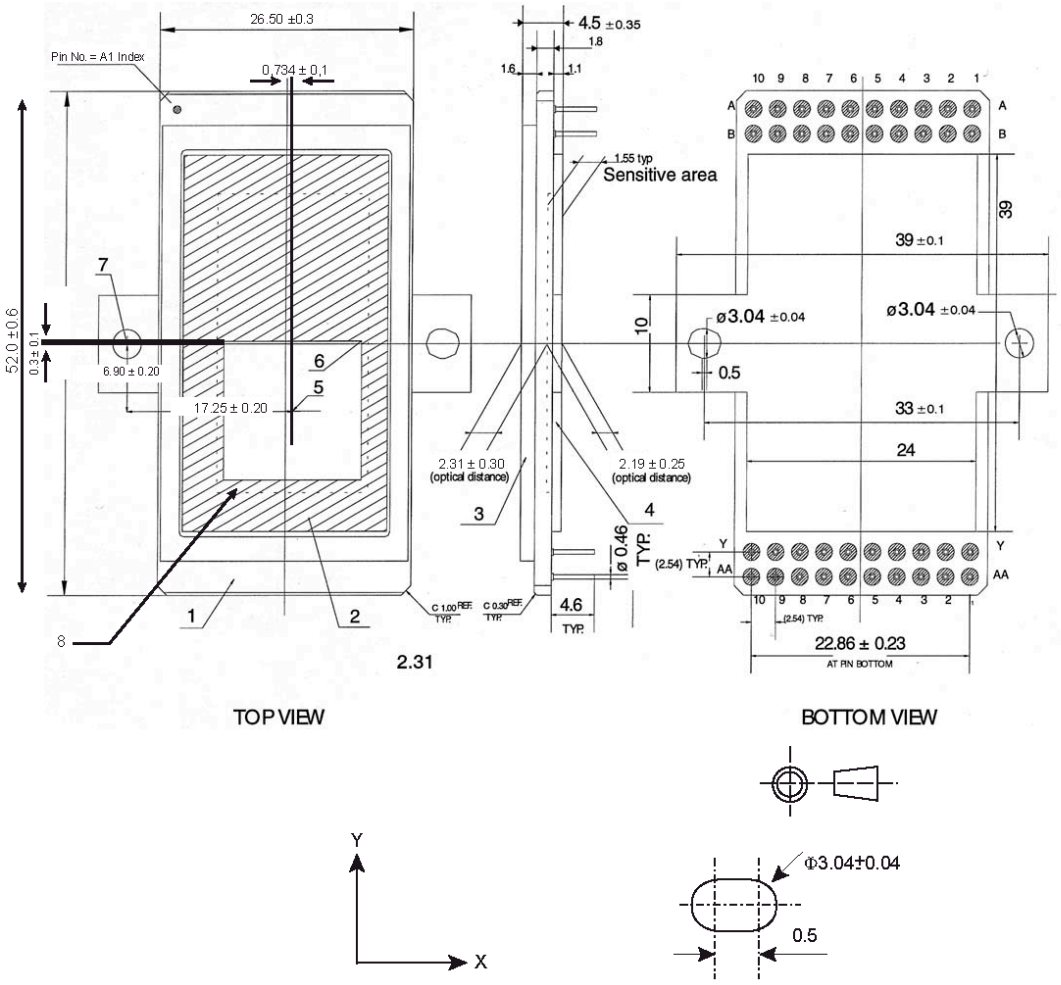

Notes:
1. All values are in mm.
2. Black alumina 40-lead PGA package
3. Black optical mask (only on sealed version)
4. 400 nm – 700 nm AR coated window (R < 1% per side). Only on sealed version
5. Metal back, (CuW – copper tungsten) gold plated. Electrically grounded (VSS)
6. Optical center
7. First useful pixel (readout through Vos1)
8. Mechanical reference
9. Photosensitive area dimensions 14,392(X) x 14,358(Y)

Parameter	Mechanical Distance	Optical Distance	Unit
Z_{top}	2.82 ± 0.31	2.31 ± 0.30	mm
Z_{bottom}	1.68 ± 0.15	2.19 ± 0.25	mm

APPENDIX K. MISSION PHASE DEFINITIONS MEMORANDUM

Memorandum SRP-03-2006 rev
14 April 2006

Subject: MESSENGER Mission Phase Definitions
From: R. L. McNutt, Jr.
To: Distribution

This memorandum documents names and time boundaries for MESSENGER mission phases. These identified phases will be used by the MESSENGER Science Team for the submission of all instrument and spacecraft data to the Planetary Data System (PDS), as required. It is expected that these phases will also be used in the science operations planning process for the MESSENGER mission.

The mission phases are defined naturally by the various planetary encounters and their intervening cruise periods. Given the short encounter times for each MESSENGER flyby, we define encounter phases on a ±2 week basis centered on the closest approach to each target body and separate such encounter segments by cruise phases. Nominal orbital phase will thus begin 2 weeks prior to the Mercury Orbit Insertion (MOI) maneuver and continue through to the end of the nominal (controlled) part of the mission.

A launch phase has been defined to capture instrument data produced between launch and the beginning of Phase E.

These definitions were motivated in part by a request from the Planetary Data System (PDS) that Experimental Data Records (EDRs) include "MISSION_PHASE_NAME" as part of data record header information. The PDS has requested further that mission phases be defined to the nearest second. Given actual planning and timing uncertainties, the approach adopted is to identify Universal Time Coordinated (UTC) times that are *approximately* 2 weeks from the defined events and then *define* these times as mission phase boundaries for the future of the mission, regardless of whether the "2-week rule" continues to hold precisely or not. This procedure will allow population of the PDS files irrespective of any relatively small (~days) time shifts in nominal events as now planned.

The cruise-segment naming convention includes the upcoming target in the name for easy identification. This convention as adopted is shown in Table 1. Input information is taken from http://messweb.jhuapl.edu/MD/servlet/Trajdb.

N.B. Two weeks = 14 days; "Start Time" is assumed to be on the given day at 00:00:00.000 UTC; "End time" is assumed to be on the given day at 23:59:59.0 UTC for the PDS and 23:59:59.999 for other purposes for which a quoted time to the nearest millisecond is appropriate. In each entry the corresponding day of year (DOY) is given in parentheses.

For the nominal mission now being flown, there are fourteen (14) named mission phases. These mission phase names will be used henceforth in all PDS deliveries and in all mission planning and flight documents, as appropriate.

Table 1. MESSENGER Mission Phase Definitions

Phase Event	Event Date and Time (DOY) hh:mm:ss.s UTC	Phase Name	Start time Date (DOY)	End time Date (DOY)
Launch	3 Aug 2004 (216) 06:15:56.537	Launch	3 Aug 2004 (216)	12 Sep 2004 (256)
Phase E start	13 Sep 2004 (257) 00:00:00.0	Earth_Cruise	13 Sep 2004 (257)	18 Jul 2005 (199)
Earth flyby	2 Aug 2005 (214) 19:13:08.4	Earth_Flyby	19 Jul 2005 (200)	16 Aug 2005 (228)
		Venus_1_Cruise	17 Aug 2005 (229)	9 Oct 2006 (282)
Venus flyby 1	24 Oct 2006 (297) 08:31:26.3	Venus_1_Flyby	10 Oct 2006 (283)	7 Nov 2006 (311)
		Venus_2_Cruise	8 Nov 2006 (312)	22 May 2007 (142)
Venus flyby 2	6 Jun 2007 (157) 00:12:36.9	Venus_2_Flyby	23 May 2007 (143)	20 Jun 2007 (171)
		Mercury_1_Cruise	21 Jun 2007 (172)	30 Dec 2007 (364)
Mercury flyby 1	14 Jan 2008 (014) 20:14:22.5	Mercury_1_Flyby	31 Dec 2007 (365)	28 Jan 2008 (28)
		Mercury_2_Cruise	29 Jan 2008 (29)	21 Sep 2008 (265)
Mercury flyby 2	6 Oct 2008 (280) 13:39:08.2	Mercury_2_Flyby	22 Sep 2008 (266)	20 Oct 2008 (294)
		Mercury_3_Cruise	21 Oct 2008 (295)	15 Sep 2009 (258)
Mercury flyby 3	30 Sep 2009 (273) 01:33:50.9	Mercury_3_Flyby	16 Sep 2009 (259)	14 Oct 2009 (287)
		Mercury_4_Cruise	15 Oct 2009 (288)	3 Mar 2011 (62)
MOI	18 Mar 2011 (077) 07:30:00.0	Mercury_Orbit	4 Mar 2011 (63)	18 Mar 2012 (77)

Distribution:
+SD-MAC
+MESSENGER-Core-Team
MESSENGER Program Archives
SRP Files
Archives